C-Series
CIRCUIT BREAKER

The C-Series hydraulic-magnetic circuit breakers are ideal for applications that require higher amperage and voltage handling capability in a smaller package. They are available in 1-6 poles, 0.02-100amps, UL Recognized up to 480VAC or 150VDC, UL489 Listed up to 240VAC or 125VDC, with choice of time delays, terminal options, actuator styles and colors. The C-Series employs a unique arc chute design which allows for higher interrupting capacities of up to 10,000 amps. Thermoset glass filled polyester half shell construction provides for increased mechanical and electrical strength. The wiping contacts mechanical linkage, with two step actuation, cleans contacts providing high, positive contact pressure and longer contact life. Available with American Standard or Metric Threaded Stud terminals, or Saddle Clamp screw terminals. The optional mid-trip handle style actuator allows a visual indication of electrical overload with or without alarm feature.

Product Highlights:

- Extensive list of Agency Approvals
- Available with Standard or Metric Stud terminals, or Saddle Clamp screw terminals
- Optional mid-trip handle style actuator
- Unique arc chute design which allows for higher interrupting capacities of up to 10,000 amps
- Exclusive Rockerguard and Push-To-Reset bezel
- Available with new solid color and two-color Visi-rocker® actuators
- New thermoset glass filled polyester half shell construction

Typical Applications:

- Marine
- Telecom/Datacom
- Military
- Renewable Energy
- Generators & Welders

Carling Technologies®
Innovative Designs. Powerful Solutions.

Carling Technologies, Inc.
60 Johnson Avenue, Plainville, CT 06062
Email: sales@carlingtech.com
Application Support: team2@carlingtech.com
Phone: 860.793.9281 **Fax:** 860.793.9231

www.carlingtech.com

Electrical

Maximum Voltage	AC, 480 WYE/277 VAC, 50/60 Hz (see Table A.) UL489: AC,240 VAC. (See Table D), 50/60 Hz, 125 VDC
Current Rating	Standard current coils: 0.100, 0.250, 0.500, 0.750, 1.00, 2.50, 5.00, 7.50, 10.0, 15.0, 25.0, 30.0, 35.0, 40.0, 50.0, 60.0, 70.0, 80.0, 90.0 and 100 amps. Other ratings available, see Ordering Scheme.
Standard Voltage Coils	DC - 6V, 12V; AC - 120V; other ratings available, see Ordering Scheme.
Auxiliary Switch Rating	SPDT; 10.1 amps-250VAC, DC Aux. Switch 1.0A, 65 VDC. 0.5A, 80VDC,1/4 HP, 125VAC,VDE & TUV 1.0 125 VAC.
Insulation Resistance	Minimum of 100 Megohms at 500 VDC.
Dielectric Strength	UL, CSA: 1960 V 50/60 Hz for one minute between all electrically isolated terminals. C-Series Circuit Breakers comply with the 8mm spacing and 3750V 50/60 Hz dielectric requirements from hazardous voltage to operator accessible surfaces, between adjacent poles and from main circuits to auxiliary circuits per Publications EN 60950 and VDE 0805.
Resistance, Impedance	Values from Line to Load Terminal - based on Series Trip Circuit Breaker.

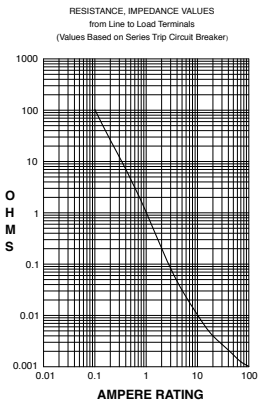

CURRENT (AMPS)	TOLERANCE (%)
0.10 - 5.0	15
5.1 - 20.0	25
20.1 - 50.0	35

Pulse Tolerance Curves

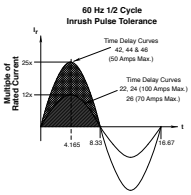

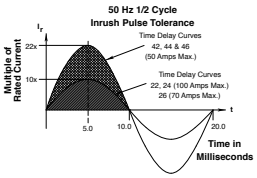

Mechanical

Endurance	10,000 ON-OFF operations @ 6 per minute; with rated current & voltage.
Trip Free	All C-Series circuit breakers will trip on overload, even when actuator is forcibly held in the ON position.
Trip Indication	The operating actuator moves positively to the OFF position when an overload causes the breaker to trip. With mid-trip, handle moves to the mid position on electrical trip of the circuit breaker. With mid trip handle with alarm switch, handle moves to the mid position and the alarm switch actuates when the circuit breaker is electrically tripped.

Physical

Number of Poles	1-6 poles ≤ 50A; 1-4 poles @ 51-70A; 1-2 poles 71-100A. UL489 Handle: 1 pole ≤ 100A, 2 pole ≤ 50A; Rocker: 1 pole ≤ 100A.
Internal Circuit Config.	Series (with or without auxiliary switch, mid trip & mid trip with alarm switch) Shunt & Relay with current or voltage trip coils, Dual Coil, Switch Only (with or without aux. switch). UL489: Series (with or without auxiliary switch, mid-trip & midtrip with alarm switch).
Weight	Approx.112 grams/pole (3.95 oz).
Standard Colors	Housing: Black

Environmental

Designed and tested in accordance with requirements of specification MIL-PRF-55629 & MIL-STD-202 as follows:

Shock	Withstands 100 Gs, 6ms sawtooth while carrying rated current per Method 213, Test Condition "I". Instantaneous and ultrashort curves tested @ 90% of rated current.
Vibration	Withstands 0.060" excursion from 10-55 Hz & 10 Gs 55-500 Hz, @ rated current per Method 204C, Test Cond. A. Instantaneous & ultrashort curves tested @ 90% of rated current.
Moisture Resistance	Method 106D, i.e., ten 24-hour cycles @ +25°C to +65°C, 80-98% RH.
Salt Spray	Method 101, Condition A (90-95% RH @ 5% NaCl Solution, 96 hrs).
Thermal Shock	Method 107D, Condition A (five cycles @ -55°C to +25°C to +85°C to +25°C).
Operating Temperature	-40°C to +85°C

*Manufacturer reserves the right to change product specification without prior notice.

Electrical Tables

Table A: Lists UL Recognized & CSA Accepted configurations and performance capabilities as a component supplementary protector

C-SERIES TABLE A: Component Supplementary Protectors

Circuit Configuration	Voltage			Current Rating		Short Circuit Capacity (Amps)		Application Codes		Construction Notes
						UL / CSA				
	Max. Rating	Frequency	Phase	Full Load Amps	General Purpose Amps	With Backup Fuse	Without Backup Fuse	UL	CSA	
Series	32	DC	---	0.02 - 100	---	---	5,000	TC1, OL1, U2	TC1, OL1, U2	---
	48	DC	---	110 - 150	---	---	5,000			---
	65	DC	---	0.02 - 70	---	---	5,000	TC1, 2, OL1, U1	TC1, 2, OL1, U1	---
				-	71 - 100			TC1, 2, OL0, U1	TC1, 2, OL0, U1	---
	80	DC	---	0.02 - 70	---	---	7,500	TC1, 2, OL1, U1	TC1, 2, OL1, U1	---
				---	71 - 100			TC1, 2, OL0, U1	TC1, 2, OL0, U1	---
				0.02 - 70	---		10,000	TC1, 2, OL1, U1	TC1, 2, OL1, U1	Must have Agency "L"
				---	71 - 100			TC1, 2, OL0, U1	TC1, 2, OL0, U1	
	125	DC	---	0.02 - 50	---	---	5,000	TC1, 2, OL1, U1	TC1, 2, OL1, U1	Must have Agency "L"
	125/250	DC	---	0.02 - 50	---	---	5,000	TC1, 2, OL1, U1	TC1, 2, OL1, U1	Must have Agency "L"
	250	DC	---	0.02 - 50	---	---	5,000	TC1, 2, OL1, U1	TC1, 2, OL1, U1	Must have Agency "L". 250 volts requires 2 pole
	125	50 / 60	1	0.02 - 100	---	---	3,000	TC1, OL1, U2	TC1, OL1, U2	Per pole rating
					---		5,000	TC1, 2, OL1, U1	TC1, 2, OL1, U1	Must have Agency "L"
	150	DC	---	---	80 - 100	---	5,000	TC1, 2, OL0, U3	---	Must have Agency "L"
					101 - 175					Must have Agency "L" parallel pole
	125/250	50 / 60	1	0.02 - 100	---	---	3,500	TC1, OL1, U2	TC1, OL1, U2	---
				0.02 - 50			3,000	TC1, 2, OL1, U1	TC1, 2, OL1, U1	2 or 3 poles breaking single phase
				51 - 100			1,000	TC1, 2, OL1, U1	TC1, 2, OL1, U1	2 or 3 poles breaking single phase
				0.02 - 100			5,000	TC1, 2, OL1, U2	TC1, 2, OL1, U2	2 or 3 poles breaking single phase. Agency "L"
	250	50 / 60	1	0.02 - 50	---	---	3,500	TC1, 2, OL1, U2	TC1, 2, OL1, U2	Per pole rating
				0.02 - 100			5,000	TC1, 2, OL1, U1	TC1, 2, OL1, U1	Must have Agency "L"
				51 - 70		5,000	---	TC1, 2, OL1, C1	TC1, 2, OL1, C1	---
			3	---	0.02 - 100	---	3,000	TC1, 2, OL0, U2	TC1, 2, OL0, U2	---
				0.02 - 70	---	5,000	---	TC1, 2, OL1, C1	TC1, 2, OL1, C1	3 poles breaking 3 phase
				---	0.02 - 90	---	5,000	TC1, 2, OL0, U1	TC1, 2, OL0, U1	Must have Agency "L"
	277	50 / 60	1	0.02 - 50	---	5,000	--	TC1, 2, OL1, C1	TC1, 2, OL1, C1	---
	480/277	50 / 60	3	0.02 - 30	---	5,000	--	TC1, 2, OL1, C1	TC1, 2, OL1, C1	3 poles breaking 3 phase
				---				TC1, 2, OL0, C1	TC1, 2, OL0, C1	---
	480	50 / 60	1	0.02 - 30	---	5,000	--	TC1, 2, OL1, C1	TC1, 2, OL1, C1	2 poles breaking 1 phase
				---				TC1, 2, OL0, C1	TC1, 2, OL0, C1	---
Dual Coil	80	DC	---	0.02 - 50	---	---	7,500	TC1, 2, OL1, U1	TC1, 2, OL1, U1	---
	125	50 / 60	1	0.02 - 50	---	---	3,000	TC1, OL1, U2	TC1, OL1, U2	Per pole rating
	125/250	50 / 60	1	0.02 - 50	---	---	3,500	TC1, OL1, U2	TC1, OL1, U2	2 or 3 poles breaking single phase
							3,000	TC1, 2, OL1, U1	TC1, 2, OL1, U1	2 or 3 poles breaking single phase
	250	50 / 60	1	0.02 - 50	---	---	3,500	TC1, OL1, U2	TC1, OL1, U2	---
			3			---	3,000	TC1, OL0, U2	TC1, OL0, U2	Per pole rating
						5,000	---	TC1, 2, OL1, C1	TC1, 2, OL1, C1	---
	277	50 / 60	1	0.02 - 50	---	5,000	---	TC1, 2, OL1, C1	TC1, 2, OL1, C1	3 poles breaking 3 phase
Shunt	80	DC	---	0.02 - 50	---	---	7,500	TC1, 2, OL1, U1	TC1, 2, OL1, U1	---
	277	50 / 60	1	0.02 - 50	---	5,000	---	TC1, 2, OL1, C1	TC1, 2, OL1, C1	---
	250	50 / 60	3	0.02 - 50	---	5,000	---	TC1, 2, OL1, C1	TC1, 2, OL1, C1	3 poles breaking 3 phase
	480/277	50 / 60	3	0.02 - 30	---	5,000	---	TC1, 2, OL1, C1	TC1, 2, OL1, C1	3 poles breaking 3 phase
				---	31 - 50			TC1, 2, OL0, C1	TC1, 2, OL0, C1	---
	480	50 / 60	1	0.02 - 30	---	5,000	---	TC1, 2, OL1, C1	TC1, 2, OL1, C1	2 poles breaking 1 phase
				---	31 - 50			TC1, 2, OL0, C1	TC1, 2, OL0, C1	---
Relay	80	DC	---	0.02 - 50	---	---	7,500	TC1, 2, OL1, U1	TC1, 2, OL1, U1	---
	277	50 / 60	1	0.02 - 50	---	5,000	---	TC1, 2, OL1, C1	TC1, 2, OL1, C1	---
	250	50 / 60	3	0.02 - 50	---	5,000	---	TC1, 2, OL1, C1	TC1, 2, OL1, C1	3 poles breaking 3 phase
Switch Only	65	DC	---	71 - 100	---	---	---	---	---	---

	80	DC	---	71 - 100	---	---	---	---	---	---

	125	50 / 60	1	0.02 - 100	---	---	---	---	---	---
	125/250	50 / 60	1	0.02 - 100	---	---	---	---	---	2 or 3 poles breaking single phase
	250	50 / 60	1	0.02 - 100	---	---	---	---	---	---
			3	0.02 - 70						---
	277	50 / 60	1	0.02 - 50	---	---	---	---	---	---
	480/277	50 / 60	3	0.02 - 30	---	---	---	---	---	3 poles breaking 3 phase
				---	31 - 50					---

Notes:

1. Requires branch circuit backup with a UL LISTED Type K5 or RK5 fuse rated 15A minimum and no more than 4 times full load amps not to exceed 125A for 50 Amp or less rating and not to exceed 175 for 51 through 100 Amp rating

Electrical Tables

Table B: Lists UL Recognized and CSA Accepted configurations and performance capabilities as a Manual Motor Controller.

C-SERIES TABLE B: Manual Motor Controllers					
Circuit Configuration	Voltage			Current Rating	Horsepower Ratings
	Max. Rating	Frequency	Phase	Full Load Amps	Max. HP
Series, Shunt & Relay Switch Only	120 [1]	50 / 60	1	0.02 - 50	7 ½
	250 [1]	50 / 60	1	0.02 - 20	3
			3	0.02 - 20	5
	277 [1]	50 / 60	1	0.02 - 20	3
	480 [2]	50 / 60	3	0.02 - 20	5

Notes:
1. Requires branch circuit backup with a UL Listed Type K5 or RK5 fuse rated 15A Minimum and no more than 4 times full load amps not to exceed 125A for 50 Amp or less rating and not to exceed 175A for 51 through 100A rating.
2. UL Recognized and CSA Certified at 480V refers to 3 and 4 pole versions used in a 3Ø, WYE connected circuit or a 2 pole version with 2 poles breaking 1Ø and backed up with a series fusing as stated in note 1.

* Shunt and Relay Trip - Voltage Coil Construction not current coils

Table C: Lists UL Recognized, CSA Accepted, VDE and TUV Certified configurations and performance capabilities as a Component Supplementary Protector.

C-SERIES TABLE C: Component Supplementary Protectors													
Circuit Configuration	Voltage			Current Rating		Short Circuit Capacity (Amps)						Application Codes UL / CSA	Construction Notes
						UL / CSA		VDE		TUV			
	Max. Rating	Frequency	Phase	Full Load Amps	General Purpose Amps [1]	With Backup Fuse	Without Backup Fuse	(Inc) With Backup Fuse	(Icn) Without Backup Fuse	(Inc) With Backup Fuse	(Icn) Without Backup Fuse		
Series	80	DC	---	0.10 - 70	---	---	7,500	---	5,000	5,000	1,500	TC1,2,OL1,U1	---
			---	71 - 100	71 - 100	---	10,000	---	5,000	---	5,000	TC1,2,OL0,U1	Agency F, H, J or R
	125	DC	---	1 - 50	---	---	5,000	---	---	---	5,000	TC1,2,OL1,U1	Agency J or R
	250	DC	---	0.10 - 50	---	---	5,000	---	---	---	5,000	TC1,2,OL1,U1	2P, Agency J or R
		50 / 60	1	0.10 - 70				3,000	1,500	3,000	1,500		---
				0.10 - 100				---	---	5,000	5,000		Agency J or R
			3	0.10 - 90				---	---				
	415	50 / 60	3	0.10 - 30	---	5,000 [2]	---	3,000	1,500	3,000	1,500	TC1,2,OL1,C1	Rocker
								5,000	2,500				Handle, Agency F, H, J or R
Dual Coil	80	DC	---	0.10 - 30	---	---	7,500	---	1,500	5,000	1,500	TC1,2,OL1,U1	---
	250	50 / 60	1 & 3				5,000	3,000		3,000			
Shunt	80	DC	---	0.10 - 70	---	---	7,500	---	5,000	5,000	1,500	TC1,2,OL1,U1	---
	250	50 / 60	1 & 3	0.10 - 70	---	---	5,000	3,000	1,500	3,000	1,500	TC1,2,OL1,U1	---
	415	50 / 60	3	0.10 - 30	---	5,000 [2]	---	3,000	1,500	3,000	1,500	TC1,2,OL1,C1	Rocker
								5,000	2,500				Handle, Agency F, H, J or R

Notes:
1. General Purpose ratings for UL/CSA only.
2. Requires branch circuit backup with a UL LISTED Type K5 or RK5 fuse rated 15A minimum and no more than 4 times full load amps not to exceed 125A for 50 Amp or less rating and not to exceed 175 for 51 through 100 Amp rating.

Table D: Lists UL Listed (489), CSA Certified (C22.2 No. 5.1-M) configuration and performance capabilities as a Molded Case Circuit Breaker.

C-SERIES TABLE D: UL489 Listed Branch Circuit Breakers						
Circuit Configuration	Voltage			Current Rating	Interrupting Capacity (Amps)	Construction Notes
	Max. Rating	Frequency	Phase	Full Load Amps	Without Backup Fuse	
Series	80	DC	---	0.10 - 100	50,000 [1]	Limited to 2 Poles Max from 71 - 100 Amps
					10,000	
				101 - 150	10,000	2 Poles - Parallel Poles
				151 - 250	10,000	3 Poles - Parallel Poles
	125	DC	---	0.10 - 100	5,000	1 - 3 Poles
	125 / 250	DC	---	0.10 - 50	5,000	1 or 2 Poles (2 poles required for 250 Volts)
	120	50 / 60	1	0.10 - 50	10,000	1 - 3 Poles
				51 - 70	5,000	
	120 / 240	50 / 60	1	0.10 - 50	5,000	2 or 3 Poles (1 pole of a 3 pole unit is neutral)
					10,000 [1]	
	240	50 / 60	1	0.10 - 30	5,000	1 Pole
				0.10 - 20	10,000	2 Poles
	277	50 / 60	1	0.10 - 20	10,000	1 Pole
Dual Coil	120	50 / 60	1	0.10 - 30	10,000	---

Notes:
1 Special catalog number required. Consult factory.

Electrical Tables

Table E: Lists UL Recognized, CSA Accepted configurations and performance capabilities as Protectors, Supplementary for Marine Electrical and Fuel Systems (Guide PEQZ2, File E75596). Ignition Protected per UL 1500. UL Classified Small Craft Electrical Devices, Marine in accordance with ISO 8846 (Guide UZMK, File MQ1515) as Marine Supplementary Protectors.

C-SERIES TABLE E: UL1500 *(Marine Ignition Protection)*								
Circuit Configuration	Voltage			Current Rating	Interrupting Capacity (Amps)	Application Codes		Construction Notes
	Max. Rating	Frequency	Phase	Full Load Amps	Without Backup Fuse	UL	CSA	
Series	48	DC	---	0.02 - 100	5,000	TC1, 2, OL1, U1	TC1, 2, OL1, U1	---
				101 - 150				
	65	DC	---	0.02 - 100	1,500	TC1, 2, OL0, U1	TC1, 2, OL0, U1	---
	80	DC	---	0.02 - 70	1,500	TC1, 2, OL1, U1	TC1, 2, OL1, U1	---
	125	50 / 60	1	0.02 - 70	5,000	TC1, 2, OL1, U1	TC1, 2, OL1, U1	---
				71 - 100	1,500			
	250	50 / 60	1	0.02 - 70	1,500	TC1, 2, OL1, U1	TC1, 2, OL1, U1	---
				71 - 100				2 Poles Breaking Single Phase

Table F: Lists UL Listed configurations and performance capabilities as Circuit Breakers for use in Communications Equipment (Guide DITT, File E189195), under UL489A.

C-SERIES TABLE F: PARALLEL POLE CONSTRUCTION *UL489A Listed for Communications Equipment*				
Circuit Configuration	Voltage		Current Rating	Interrupting Capacity (Amps)
	Max. Rating	Frequency	General Purpose Amps	Without Backup Fuse
Series	80	DC	100 - 250	10,000

Agency Certifications

UL Recognized

UL Standard 1077 — Component Recognition Program as Protectors Supplementary (Guide CCN/QVNU2, File E75596)

UL Standard 508 — Switches, Industrial Control (Guide CCN/NRNT2, File E148683)

UL Standard 1500 — Protectors, Supplementary for Marine Electrical & Fuel Systems (Guide PEQZ2, File E75596) Ignition Protection

UL Listed

UL Standard 489 — Circuit Breakers, Molded Case, (Guide DIVQ, File E129899)

UL Standard 489A — Communications Equipment (Guide CCN/DITT, File E189195)

CSA Accepted — Component Supplementary Protector under Class 3215 30, FIle 047848 0 000 CSA Standard C22.2 No. 235

CSA Certified — Circuit Breaker Model Case (Class 1432 01, File 093910), CSA Standard C22.2 No. 5.1 - M

TUV Certified — EN60934, under License No. R72040875

VDE Certified — EN60934, VDE 0642 under File No. 10537

C	A	3	–	B	0	–	10	–	450	–	1	2	1	–	C
1 Series	2 Actuator	3 Poles		4 Circuit	5 Aux/Alarm Switch		6 Frequency & Delay		7 Current Rating		8 Terminal	9 Actuator Color	10 Mounting Bezel/Barrier		11 Agency Approval

1 SERIES
C

2 ACTUATOR [1]
A Handle, one per pole
B Handle, one per multipole unit
S Mid-Trip Handle, one per pole
T Mid-Trip Handle, one per pole & Alarm Switch

3 POLES [2]
1 One
2 Two
3 Three
4 Four
5 Five
6 Six

4 CIRCUIT [3]
A [3] Switch Only (No Coil)
B Series Trip (Current)
C Series Trip (Voltage)
D [4] Shunt Trip (Current)
E [4] Shunt Trip (Voltage)
F [4] Relay Trip (Current)
G [4] Relay Trip (Voltage)
H [4,5] Dual Coil with Shunt Trip Voltage Coil
K [4,5] Dual Coil with Relay Trip Voltage Coil

5 AUXILIARY / ALARM SWITCH
0 without Aux Switch
2 S.P.D.T., 0.110 Q.C. Term.
3 S.P.D.T., 0.139 Solder Lug
4 S.P.D.T., 0.110 Q.C. Term. (Gold Contacts)
6 S.P.S.T., 0.139 Solder Lug
8 S.P.S.T., 0.187 Q.C. Term.
9 S.P.D.T., 0.187 Q.C. Term.

6 FREQUENCY & DELAY
03 [3] DC 50/60Hz, Switch Only
10 [7] DC Instantaneous
11 DC Ultra Short
12 DC Short
14 DC Medium
16 DC Long
20 [7] 50/60Hz Instantaneous
21 50/60Hz Ultra Short
22 50/60Hz Short
24 50/60Hz Medium
26 50/60Hz Long
30 DC 50/60Hz Instantaneous
31 DC 50/60Hz Ultra Short
32 DC 50/60Hz Short
34 DC 50/60Hz Medium
36 DC 50/60Hz Long
42 [8] 50/60Hz Short, Hi-Inrush
44 [8] 50/60Hz Medium, Hi-Inrush
46 [8] 50/60Hz Long, Hi-Inrush
52 [8] DC Short, Hi-Inrush
54 [8] DC Medium, Hi-Inrush
56 DC Long, Hi-Inrush

Notes:
1 Actuator Code:
A: Handle tie pin spacer(s) and retainers provided assembled with multi-pole units.
B: Handle location as viewed from front of breaker:
2 pole - left pole 3 pole - center pole 4 pole - two handles at center poles
5 pole - three handles at center poles 6 pole - four handles at center poles
S: Handle moves to mid-position only upon electrical trip of the breaker. Available with circuit codes B, C, D, E, F, G, H and K.
T: Handle moves to mid-position and alarm switch activates only upon electrical trip of the breaker. Available with circuit codes B & C.
2 Standard multipole units have all poles identical except when specifying auxiliary switch and/or mixed poles. 4 pole max with VDE. 5th pole available as Series Trip with Voltage Coil only.
3 Switch Only circuits, rated up to 50 amps and 6 poles, and only available with VDE Certification when tied to a protected pole (Circuit Code B, C, D or H.). For .02 to 30 amps, select Current Code 630. For 35 - 50 amps, select Current Code 650. For 55-70 amps, select Current Code 670. For 75-100 amps, select Current Code 810.
4 Circuit Codes D,E,F,G,H & K available with Terminal Codes 1,2,4 & 5 only. Circuit Codes D, F, H & K available up to 50 amps maximum Current Rating.
5 Consult factory for available Dual Coil options, as special catalog number is required. Dual Coil Voltage Coils with Shunt Trip Construction trip instantaneously on line voltage. Dual Coil Voltage Coils require 30VA minimum power to trip instantaneously and are rated for intermittent duty only.
6 Auxiliary Switch available with Series Trip and Switch Only circuits. On multi-pole breakers, one auxiliary switch is supplied, mounted in the extreme right pole.
7 Voltage coils not rated for continuous duty. Available only with delay codes 10 & 20.
8 Available with Circuit Codes B & D only, and up to 50 amps maximum.
9 Current Ratings 60 - 70 are available up to four poles maximum. Ratings 71 - 100 are available up to two poles maximum.
10 Terminal Code 1 available to 60 amps maximum.
11 Terminal Codes 2, 4, 5 and C available to 50 amps maximum.
12 Terminal Codes 3, 6 & 9 available to 100 amps maximum.
13 Terminal Code 7 available to 25 amps maximum.
14 Terminal Code A available to 100 amps maximum.
15 Terminal Codes 7, 9 & C are not VDE approved.
16 No marking available. Consult factory. VDE/TUV Approval requires dual (I-O, ON-OFF) or I-O markings on all handles.
17 Single pole only.
18 VDE/TUV: 30 amps max.; UL/CSA: 50 amps max.; Available in 2 - 4 poles only and limited to AC Delays. "General Purpose amps" not rated for "full load amps" or to be used in applications with a motor.

7 CURRENT RATING (AMPERES)

CODE	AMPERES	CODE	AMPERES	CODE	AMPERES	CODE	AMPERES
020	0.020	**235**	0.350	**430**	3.000	**614**	14.000
025	0.025	**240**	0.400	**435**	3.500	**615**	15.000
030	0.030	**245**	0.450	**440**	4.000	**616**	16.000
035	0.035	**250**	0.500	**445**	4.500	**617**	17.000
040	0.040	**255**	0.550	**450**	5.000	**618**	18.000
045	0.045	**260**	0.600	**455**	5.500	**620**	20.000
050	0.050	**265**	0.650	**460**	6.000	**622**	22.000
055	0.055	**270**	0.700	**465**	6.500	**624**	24.000
060	0.060	**275**	0.750	**470**	7.000	**625**	25.000
065	0.065	**280**	0.800	**475**	7.500	**630**	30.000
070	0.070	**285**	0.850	**480**	8.000	**635**	35.000
075	0.075	**290**	0.900	**485**	8.500	**640**	40.000
080	0.080	**295**	0.950	**490**	9.000	**650**	50.000
085	0.085	**410**	1.000	**495**	9.500	**660** [9]	60.000
090	0.090	**512**	1.250	**610**	10.000	**670** [9]	70.000
095	0.095	**415**	1.500	**710**	10.500	**680** [9]	80.000
210	0.100	**517**	1.750	**611**	11.000	**685** [9]	85.000
215	0.150	**420**	2.000	**711**	11.500	**690** [9]	90.000
220	0.200	**522**	2.250	**612**	12.000	**695** [9]	95.000
225	0.250	**425**	2.500	**712**	12.500	**810** [9]	100.00
230	0.300	**527**	2.750	**613**	13.000		

OR VOLTAGE COIL (NORMAL RATED VOLTAGE) [7]

CODE	AMPERES	CODE	AMPERES	CODE	AMPERES	CODE	AMPERES
A06	6 DC	**A32**	32 DC	**J12**	12 AC	**J65**	65 AC
A12	12 DC	**A48**	48 DC	**J18**	18 AC	**K20**	120 AC
A18	18 DC	**A65**	65 DC	**J24**	24 AC	**L40**	240 AC
A24	24 DC	**J06**	6 AC	**J48**	48 AC		

8 TERMINAL [15]
1 [10] Stud 10-32
2 [11] Screw 10-32
3 [12] Stud 1/4-20
4 [11] Stud M5 x 0.8
5 [11] Screw M5 x 0.8
6 [12] Stud M6
7 [13,15] 0.250 Double Click Connect
9 [15] 7/16" Clip Terminal
A [14] Plug-In Stud
C [11,15] 5/16" Clip Terminal

9 ACTUATOR COLOR & LEGEND [16]

Actuator Color	I-O	ON-OFF	Dual	Legend Color
White	**A**	**B**	**1**	Black
Black	**C**	**D**	**2**	White
Red	**F**	**G**	**3**	White
Green	**H**	**J**	**4**	White
Blue	**K**	**L**	**5**	White
Yellow	**M**	**N**	**6**	Black
Gray	**P**	**Q**	**7**	Black
Orange	**R**	**S**	**8**	Black
Black (short handle)[17]	**T**	**U**	**9**	White

10 MOUNTING / BARRIERS

	MOUNTING STYLE	BARRIERS	VOLTAGE
	Threaded Insert		
1	6-32 x 0.195 inches	no	< 300
A	6-32 X 0.195 inches	yes	< 300
C [18]	6-32 X 0.195 inches	yes	≥ 300
2	ISO M3 x 5mm	no	< 300
B	ISO M3 x 5mm	yes	< 300
D [18]	ISO M3 x 5mm	yes	≥ 300
Front panel Snap-In, 1.00" [25.4mm] wide bezel			
E [17]	with Handleguard	no	< 300

11 AGENCY APPROVAL
C UL Recognized, CSA Accepted
D VDE Certified, UL Recognized, CSA Accepted
E TUV Certified, UL Recognized, CSA Accepted
H UL489 Construction: VDE Certified, UL Recognized, CSA Accepted
I UL Recognized STD 1077, UL Recognized 1500 (ignition protected), CSA Accepted
L UL489 Construction: UL Recognized, CSA Accepted
R UL489 Construction: TUV Certified, UL Recognized, CSA Accepted

C	A	2	–	P	0	–	D4	–	820	–	3	2	1	–	M	T
1 Series	2 Actuator	3 Poles		4 Circuit	5 Aux/Alarm Switch		6 Frequency & Delay		7 Current Rating		8 Terminal	9 Actuator Color	10 Mounting		11 Max. App. Rating	12 Agency Approval

1 SERIES
C

2 ACTUATOR
A Handle, one per pole
S Mid-Trip Handle, one per pole [1]
T Mid-Trip, one per pole & Alarm Switch [1]

3 POLES [4]
1 One
2 Two
3 Three

4 CIRCUIT
P Series Trip (parallel pole)

5 AUXILIARY / ALARM SWITCH
0 without Aux Switch
2 S.P.D.T., 0.110 Q.C. Term.
3 S.P.D.T., 0.139 Solder Lug
4 S.P.D.T., 0.110 Q.C. Term. (Gold Contacts)
5 S.P.S.T., N.O., 0.110 Q.C Term. (Gold Contacts)
6 S.P.S.T., 0.139 Solder Lug
7 S.P.S.T., 0.110 Q.C Term. (Gold Contacts)
8 S.P.S.T., 0.187 Q.C. Term.
9 S.P.D.T., 0.187 Q.C. Term.

6 FREQUENCY & DELAY
D1 DC Ultra Short
D2 DC Short
D4 DC Medium
D6 DC Long

7 CURRENT RATING (AMPERES) [4]

CODE	AMPERES						
810	100.00	**813**	130.00	**817**	170.00	**820**	200.00
811	110.00	**814**	140.00	**917**	175.00	**922**	225.00
812	120.00	**815**	150.00	**818**	180.00	**825**	250.00
912	125.00	**816**	160.00	**819**	190.00		

8 TERMINAL [5]
3 1/4-20 threaded Stud
6 M6 threaded Stud
A Plug-In Stud [3]

9 ACTUATOR COLOR [2]

	LEGEND ON-OFF	Dual	Legend Color
White	**B**	**1**	Black
Black	**D**	**2**	White
Red	**G**	**3**	White
Green	**J**	**4**	White
Blue	**L**	**5**	White
Yellow	**N**	**6**	Black
Gray	**Q**	**7**	Black
Orange	**S**	**8**	Black

10 MOUNTING
Threaded Insert
1 6-32 x 0.195 inches
2 ISO M3 x 5mm

11 MAXIMUM APPLICATION RATING
M 80 DC

12 AGENCY APPROVAL [6]
A Without Approval
G UL489 Listed
J UL489A Listed, TUV Certified
K UL489A Listed, VDE Certified
T UL489A Listed
7 UL489A Listed, TUV Certified

Notes:
1 Handle moves to Mid-Position only upon electrical trip of C/B when Actuator S is specified. When Actuator Code T is specified, handle moves to Mid Position and Alarm Switch actuates only upon electrical trip of C/B. Code T is only available with Circuit Code N.
2 Standard Handle colors are White, Black, Red & Yellow.
3 Breakers with Terminal Codes 3 & 6 are supplied with bus bars connecting the Line and Load Terminals. For Terminal Code A, Line and Load Terminals must be connected to a copper bus bar having a minimum cross-section of 0.078 square inches. Terminal Code A is not available on the single pole unit.
4 Ratings for 101 to 125 amps are available in 1-pole.
Ratings from 110 to 200 amps are available in 2-pole.
For ratings from 225-300 amps, specify 3-pole.
5 1 pole only available with terminal codes 3 and 6.
6 Agency codes K and 7 are not available with 1 pole.
Agency code J is only available with 1 pole.
Agency code G is only available in 2 and 3 pole.
Circuit P, ratings 101-150 amps (2 pole) and ratings 151-250 amps (3 pole).

C	A	3	–	B	0	–	14	–	450	–	1	2	1	–	K	G
1 Series	2 Actuator	3 Poles		4 Circuit	5 Aux/Alarm Switch		6 Frequency & Delay		7 Current Rating		8 Terminal	9 Actuator Color	10 Mounting/ Barriers		11 Max. App. Rating	12 Agency Approval

1 SERIES
C

2 ACTUATOR [1]
A Handle, one per pole
B Handle, one per multipole unit
S Mid-Trip Handle, one per pole
T Mid-Trip Handle, one per pole & Alarm Switch

3 POLES [2]
1 One **2** Two **3** Three

4 CIRCUIT
B Series Trip (Current)

5 AUXILIARY / ALARM SWITCH [3]
0 without Aux Switch
2 S.P.D.T., 0.110 Q.C. Term.
3 S.P.D.T., 0.139 Solder Lug
4 S.P.D.T., 0.110 Q.C. Term. (Gold Contacts)
6 S.P.S.T., 0.139 Solder Lug
8 S.P.S.T., 0.187 Q.C. Term.
9 S.P.D.T., 0.187 Q.C. Term.

6 FREQUENCY & DELAY
11 DC Ultra Short
12 DC Short
14 DC Medium
16 DC Long
21 50/60Hz Ultra Short
22 50/60Hz Short
24 50/60Hz Medium
26 50/60Hz Long
42 [4] 50/60Hz Short, Hi-Inrush
44 [4] 50/60Hz Medium, Hi-Inrush
46 [4] 50/60Hz Long, Hi-Inrush
52 [4] DC Short, Hi-Inrush
54 [4] DC Medium, Hi-Inrush
56 [4] DC Long, Hi-Inrush

Notes:
1 Actuator Code:
A: Handle tie pin spacer(s) and retainers provided assembled with multi-pole units.
B: Handle located, as viewed from front of breaker in left pole. 2 pole maximum.
S: Handle moves to mid-position only upon electrical trip of the breaker.
T: Handle moves to mid-position and alarm switch activates only upon electrical trip of the breaker.
2 Standard multipole units have all poles identical except when specifying auxiliary switch and/or mixed poles.
2 & 3 pole circuit breakers required for 120/240 VAC (Maximum application rating code C) applications, have all poles identical except when specifying auxiliary / alarm switch which is normally supplied in extreme right pole per figure B. Terminal barriers are required on all multipole breakers.
Third pole is for 120/240 VAC applications requiring neutral disconnect. The 3rd pole has the same construction as poles 1 & 2.
3 On multi-pole breakers, one auxiliary. switch is supplied, mounted in the extreme right pole.
VDE approval on auxiliary switch codes 2, 3 & 4 only.
Auxiliary / Alarm Switch with Independent Circuit ie: separate from breaker circuit, only available with circuit breakers rated 50 amp maximum at 80 VDC, 125 VDC, and 120 VAC. Auxiliary / Alarm Switch with Dependent Circuit ie: same as circuit breaker, is supplied from factory with common terminal of auxiliary / alarm switch connected to line terminal on 120/240 and 240 VAC ratings. Circuit breakers rated 120 VAC 50 amp maximum can be supplied with Auxiliary/Alarm switch common terminal connected to breaker line terminal. Consult factory for special catalog number.
4 Available up to 50 amps maximum.
5 Current ratings 71 - 100 with VDE approvals are available up to two poles maximum.
6 Terminal Codes 9 & C are not VDE approved.
7 Terminal Code 1 available to 60 amps maximum.
8 Terminal Codes 2, 4, 5 & C available to 50 amps maximum.
9 Terminal Codes 3, 6 & 9 available to 100 amps maximum.
10 Terminal Code A available to 100 amps maximum.
11 VDE and TUV approvals require Dual (I-O, ON-OFF) markings on all handles.
12 Barriers supplied on multi-pole units only.

7 CURRENT RATING (AMPERES)

CODE	AMPERES	CODE	AMPERES	CODE	AMPERES	CODE	AMPERES
210	0.100	**295**	0.950	**470**	7.000	**618**	18.000
215	0.150	**410**	1.000	**475**	7.500	**620**	20.000
220	0.200	**512**	1.250	**480**	8.000	**622**	22.000
225	0.250	**415**	1.500	**485**	8.500	**624**	24.000
230	0.300	**517**	1.750	**490**	9.000	**625**	25.000
235	0.350	**420**	2.000	**495**	9.500	**630**	30.000
240	0.400	**522**	2.250	**610**	10.000	**635**	35.000
245	0.450	**425**	2.500	**710**	10.500	**640**	40.000
250	0.500	**527**	2.750	**611**	11.000	**660**	60.000
255	0.550	**430**	3.000	**711**	11.500	**670**	70.000
260	0.600	**435**	3.500	**612**	12.000	**680**	80.000
265	0.650	**440**	4.000	**712**	12.500	**685**	85.000
270	0.700	**445**	4.500	**613**	13.000	**690**	90.000
275	0.750	**450**	5.000	**614**	14.000	**695**	95.000
280	0.800	**455**	5.500	**615**	15.000	**810**	100.00
285	0.850	**460**	6.000	**616**	16.000		
290	0.900	**465**	6.500	**617**	17.000		

8 TERMINAL [6]
1 [7] Stud 10-32
2 [8] Screw 10-32
3 [9] Stud 1/4-20
4 [8] Stud M5 x 0.8
5 [8] Screw M5 x 0.8
6 [9] Stud M6
9 [9] 7/16" Clip Terminal
A [10] Plug-In Stud
C [8] 5/16" Clip Terminal

9 ACTUATOR COLOR & LEGEND [11]

Actuator Color	ON-OFF	Dual	Legend Color
White	**B**	**1**	Black
Black	**D**	**2**	White
Red	**G**	**3**	White
Green	**J**	**4**	White
Blue	**L**	**5**	White
Yellow	**N**	**6**	Black
Gray	**Q**	**7**	Black
Orange	**S**	**8**	Black

10 MOUNTING / BARRIERS

	MOUNTING STYLE	BARRIERS [12]
	Threaded Insert	
1	6-32 x 0.195 inches	yes
2	ISO M3 x 5mm	yes

11 MAXIMUM APPLICATION RATING
A 65 DC
B 125 DC
C 120/240 AC [2]
D 240 AC
K 120 AC
F 277 AC
M 80 DC

12 AGENCY APPROVAL [11]
A without approvals
F UL489 Listed, CSA Certified & VDE Certified
G UL489 Listed & CSA Certified
J UL489 Listed, CSA Certified & TUV Certified

C	C	3	–	B	0	–	14	–	450	–	1	2	1	–	D
1 Series	2 Actuator	3 Poles		4 Circuit	5 Aux/Alarm Switch		6 Frequency & Delay		7 Current Rating		8 Terminal	9 Actuator Color	10 Mounting/ Barriers		11 Agency Approval

1 SERIES
C

2 ACTUATOR [1]

Two Color Visi-Rocker
- **C** Indicate ON, vertical legend
- **D** Indicate ON, horizontal legend
- **E** Indicate ON, no legend
- **F** Indicate OFF, vertical legend
- **G** Indicate OFF, horizontal legend
- **H** Indicate OFF, no legend

Push-To-Reset, Visi-Rocker
- **N** Indicate OFF, vertical legend
- **O** Indicate OFF, horizontal legend
- **P** Indicate OFF, no legend

Single color
- **J** *Vertical legend*
- **K** Horizontal legend
- **L** No legend

Push-To-Reset, Single color
- **R** *Vertical legend*
- **U** Horizontal legend
- **V** No legend

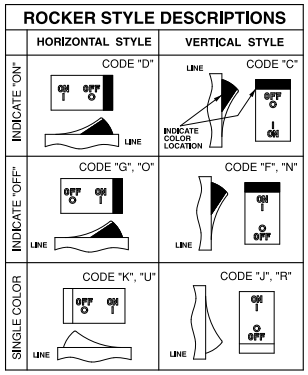

3 POLES [2]
1 One **2** Two **3** Three

4 CIRCUIT
- **A** [3] Switch Only (No Coil)
- **B** Series Trip (Current)
- **C** Series Trip (Voltage)
- **D** [4] Shunt Trip (Current)
- **E** [4] Shunt Trip (Voltage)
- **F** [4] Relay Trip (Current)
- **G** [4] Relay Trip (Voltage)
- **H** [4,5] Dual Coil with Shunt Trip Voltage Coil
- **K** [4,5] Dual Coil with Relay Trip Voltage Coil

5 AUXILIARY / ALARM SWITCH [6]
- **0** without Aux Switch
- **2** S.P.D.T., 0.110 Q.C. Term.
- **3** S.P.D.T., 0.139 Solder Lug
- **4** S.P.D.T., 0.110 Q.C. Term. (Gold Contacts)
- **6** S.P.S.T., 0.139 Solder Lug
- **8** S.P.S.T., 0.187 Q.C. Term.
- **9** S.P.D.T., 0.187 Q.C. Term.

6 FREQUENCY & DELAY

03	DC 50/60Hz, Switch Only	**30**	DC 50/60Hz Instantaneous
10 [7]	DC Instantaneous	**31**	DC 50/60Hz Ultra Short
11	DC Ultra Short	**32**	DC 50/60Hz Short
12	DC Short	**34**	DC 50/60Hz Medium
14	DC Medium	**36**	DC 50/60Hz Long
16	DC Long	**42** [8]	50/60Hz Short, Hi-Inrush
20 [7]	50/60Hz Instantaneous	**44** [8]	50/60Hz Medium, Hi-Inrush
21	50/60Hz Ultra Short	**46** [8]	50/60Hz Long, Hi-Inrush
22	50/60Hz Short	**52** [8]	DC Short, Hi-Inrush
24	50/60Hz Medium	**54** [8]	DC Medium, Hi-Inrush
26	50/60Hz Long	**56** [8]	DC Long, Hi-Inrush

Notes:
1. Push-To-Reset actuators have OFF portion of rocker shrouded.
2. Multi-pole breakers have all poles identical except when specifying Auxiliary switch and/or mixed poles, and have one rocker per breaker. Rocker location as viewed from front panel: 2 pole – left pole; 3 pole – center pole.
3. Switch Only circuits, rated up to 50 amps and 3 poles, and only available with VDE Certification when tied to a protected pole (Circuit Code B, C, D or H.), For .02 to 30 amps, select Current Code 630. For 35 - 50 amps, select Current Code 650. For 55-70 amps, select Current Code 670. For 75-100 amps, select Current Code 810.
4. Circuit Codes D,E,F,G,H & K available with Terminal Codes 1,2,4 & 5 only. Circuit Codes D,F,H & K available up to 50 amps maximum Current Rating.
5. Consult factory for available Dual Coil options, as special catalog number is required. Dual Coil Voltage Coils with Shunt Trip Construction trip instantaneously on line voltage. Dual Coil Voltage Coils require 30VA minimum power to trip instantaneously and are rated for intermittent duty only.
6. Auxiliary Switch available with Series Trip and Switch Only circuits. On multi-pole breakers, one auxiliary switch is supplied, mounted in the extreme right pole. Auxiliary switch codes 2, 3 & 4 are VDE approved.
7. Voltage coils not rated for continuous duty. Available only with delay codes 10 & 20.
8. Available with Circuit Codes B & D only, and up to 50 amps maximum.
9. Current Ratings 60-70 are available up to four poles maximum. Ratings 71-100 are available up to two poles maximum.
10. Terminal Code 1 available to 60 amps maximum.
11. Terminal Codes 2,4,5 & C available to 50 amps maximum.
12. Terminal Codes 3,6 & 9 available to 100 amps maximum.
13. Terminal Code 7 available to 25 amps maximum.
14. Terminal Code A available to 100 amps maximum.
15. Terminal Codes 7, 9 & C are not VDE approved.
16. Color shown is visi and legend with remainder of rocker black
17. Legend on Push-to-reset bezel/shroud is white when single color rocker is ordered. Dual = ON-OFF/I-O legend with actuator codes C - G, and J, K, N, O, R, & U. None = no legend with actuator codes H, L, P, V. Rockerguard available with actuator codes C - L. Push-to-reset available with actuator codes N, O, P, R, U, V.
18. VDE/TUV approval requires Dual (I-O, ON-OFF) or I-O markings on rocker.
19. VDE/TUV: 30 amps max.; UL/CSA: 50 amps max.; Available in 2 - 4 poles only and limited to AC Delays. "General Purpose amps" not rated for "full load amps" or to be used in applications with a motor.

7 CURRENT RATING (AMPERES)

CODE	AMPERES						
020	0.020	**235**	0.350	**430**	3.000	**614**	14.000
025	0.025	**240**	0.400	**435**	3.500	**615**	15.000
030	0.030	**245**	0.450	**440**	4.000	**616**	16.000
035	0.035	**250**	0.500	**445**	4.500	**617**	17.000
040	0.040	**255**	0.550	**450**	5.000	**618**	18.000
045	0.045	**260**	0.600	**455**	5.500	**620**	20.000
050	0.050	**265**	0.650	**460**	6.000	**622**	22.000
055	0.055	**270**	0.700	**465**	6.500	**624**	24.000
060	0.060	**275**	0.750	**470**	7.000	**625**	25.000
065	0.065	**280**	0.800	**475**	7.500	**630**	30.000
070	0.070	**285**	0.850	**480**	8.000	**635**	35.000
075	0.075	**290**	0.900	**485**	8.500	**640**	40.000
080	0.080	**295**	0.950	**490**	9.000	**650**	50.000
085	0.085	**410**	1.000	**495**	9.500	**660** [9]	60.000
090	0.090	**512**	1.250	**610**	10.000	**670** [9]	70.000
095	0.095	**415**	1.500	**710**	10.500	**680** [9]	80.000
210	0.100	**517**	1.750	**611**	11.000	**685** [9]	85.000
215	0.150	**420**	2.000	**711**	11.500	**690** [9]	90.000
220	0.200	**522**	2.250	**612**	12.000	**695** [9]	95.000
225	0.250	**425**	2.500	**712**	12.500	**810** [9]	100.00
230	0.300	**527**	2.750	**613**	13.000		

OR VOLTAGE COIL (NORMAL RATED VOLTAGE) [7]

CODE	AMPERES						
A06	6 DC	**A32**	32 DC	**J12**	12 AC	**J65**	65 AC
A12	12 DC	**A48**	48 DC	**J18**	18 AC	**K20**	120 AC
A18	18 DC	**A65**	65 DC	**J24**	24 AC	**L40**	240 AC
A24	24 DC	**J06**	6 AC	**J48**	48 AC		

8 TERMINAL
- **1** [10] Stud 10-32
- **2** [11] Screw 10-32
- **3** [12] Stud 1/4-20
- **4** [11] Stud M5 x 0.8
- **5** [11] Screw M5 x 0.8
- **6** [12] Stud M6
- **7** [13] 0.250 Double Quick Connect
- **9** 7/16" Clip Terminal
- **A** [14] Plug-In Stud
- **C** 5/16" Clip Terminal

9 ACTUATOR COLOR & LEGEND [16,17,18]

Actuator or Visi-Color	*Marking:*			*Marking Color:*	
Color:	**I-O**	**ON-OFF**	**Dual/None**	**Single Color Rocker/Handle**	**Visi-Rocker**
White	**A**	**B**	**1**	Black	White
Black	**C**	**D**	**2**	White	n/a
Red	**F**	**G**	**3**	White	Red
Green	**H**	**J**	**4**	White	Green
Blue	**K**	**L**	**5**	White	Blue
Yellow	**M**	**N**	**6**	Black	Yellow
Gray	**P**	**Q**	**7**	Black	Gray
Orange	**R**	**S**	**8**	Black	Orange

10 MOUNTING / BARRIERS [1]

	STANDARD ROCKER BEZEL	BARRIERS	VOLTAGE
1	6-32 x 0.195 inches	no	<300
2	6-32 x 0.195 inches	yes	<300
3 [19]	6-32 x 0.195 inches	yes	≥300
4	ISO M3 x 5mm	no	<300
5	ISO M3 x 5mm	yes	<300
6 [19]	ISO M3 x 5mm	yes	≥300
	ROCKERGUARD BEZEL		
A	6-32 x 0.195 inches	no	<300
C	6-32 x 0.195 inches	yes	<300
E [19]	6-32 x 0.195 inches	yes	≥300
G	ISO M3 x 5mm	no	<300
J	ISO M3 x 5mm	yes	<300
L [19]	ISO M3 x 5mm	yes	≥300
	PUSH-TO-RESET BEZEL		
B	6-32 x 0.195 inches	no	<300
D	6-32 x 0.195 inches	yes	<300
F [19]	6-32 x 0.195 inches	yes	≥300
H	ISO M3 x 5mm	no	<300
J	ISO M3 x 5mm	yes	<300
M [19]	ISO M3 x 5mm	yes	≥300

11 AGENCY APPROVAL
- **C** UL Recognized & CSA Accepted
- **D** VDE Certified, UL Recognized & CSA Accepted
- **E** TUV Certified, UL Recognized & CSA Accepted
- **H** UL489 Construction: VDE Certified, UL Recognized & CSA Accepted
- **I** UL Recognized STD 1077, UL Recognized 1500 (ignition protected), & CSA Accepted
- **L** UL489 Construction: UL Recognized & CSA Accepted
- **R** UL489 Construction: TUV Certified, UL Recognized & CSA Accepted

C	1	2	–	P	0	–	D4	–	820	–	3	2	A	–	M	T
1 Series	*2 Actuator*	*3 Poles*		*4 Circuit*	*5 Aux/Alarm Switch*		*6 Frequency & Delay*		*7 Current Rating*		*8 Terminal*	*9 Actuator Color*	*10 Mounting*		*11 Max. App. Rating*	*12 Agency Approval*

1 SERIES
C

2 ACTUATOR
C Curved Rocker, Two Color Visi, Indicate On, Vertical Legend
D Curved Rocker, Two Color Visi, Indicate On, Horizontal Legend
F Curved Rocker, Two Color Visi, Indicate Off, Vertical Legend
G Curved Rocker, Two Color Visi, Indicate Off, Horizontal Legend
J Curved Rocker, Single Color, Vertical Legend
K Curved Rocker, Single Color, Horizontal Legend
N Curved Rocker, Push To Reset, Two Color Visi, Vertical Legend
O Curved Rocker, Push To Reset, Two Color Visi, Horizontal Legend
1 Flat Rocker, Two Color Visi, Vertical Legend
2 Flat Rocker, Two Color Visi, Horizontal Legend
3 Flat Rocker, Single Color, Vertical Legend
4 Flat Rocker, Single Color, Horizontal Legend
5 Flat Rocker, Push To Reset, Two Color Visi, Vertical Legend
6 Flat Rocker, Push To Reset, Two Color Visi, Horizontal Legend
7 Flat Rocker, Push To Reset, Single Color, Vertical Legend
8 Flat Rocker, Push To Reset, Single Color, Horizontal Legend

3 POLES [2]
1 One **2** Two **3** Three

4 CIRCUIT
P Series Trip (parallel pole)

5 AUXILIARY/ALARM SWITCH
0 without Aux Switch
2 S.P.D.T., 0.110 Q.C. Term.
3 S.P.D.T., 0.139 Solder Lug
4 S.P.D.T., 0.110 Q.C. Term. (Gold Contacts)
5 S.P.S.T., N.O., 0.110 Q.C Term. (Gold Contacts)
6 S.P.S.T., 0.139 Solder Lug
7 S.P.S.T., 0.110 Q.C Term. (Gold Contacts)
8 S.P.S.T., 0.187 Q.C. Term.
9 S.P.D.T., 0.187 Q.C. Term.

6 FREQUENCY & DELAY
D1 DC Ultra Short
D2 DC Short
D4 DC Medium
D6 DC Long

7 CURRENT RATING (AMPERES) [2]

CODE	AMPERES						
810	100.00	**813**	130.00	**817**	170.00	**820**	200.00
811	110.00	**814**	140.00	**917**	175.00	**922**	225.00
812	120.00	**815**	150.00	**818**	180.00	**825**	250.00
912	125.00	**816**	160.00	**819**	190.00		

8 TERMINAL [3]
3 Stud 1/4-20
6 Stud M6
A Plug-In Stud [1]

9 ACTUATOR COLOR

	LEGEND ON-OFF	Dual	Legend Color
White	**B**	**1**	Black
Black	**D**	**2**	White
Red	**G**	**3**	White
Green	**J**	**4**	White
Blue	**L**	**5**	White
Yellow	**N**	**6**	Black
Gray	**Q**	**7**	Black
Orange	**S**	**8**	Black

10 MOUNTING
ROCKER / MOUNTING INSERT STYLE
A Standard Rocker Bezel - 6-32 Inserts
B Standard Rocker Bezel - M3 Inserts
C Rocker Guard Bezel - 6-32 Inserts
D Rocker Guard Bezel - M3 Inserts
E Standard Bezel with recessed Off Side Flat Rocker - 6-32 Inserts
F Standard Bezel with recessed Off Side Flat Rocker - M3 Inserts
G Push to Reset Bezel - 6-32 Inserts
H Push to Reset Bezel - M3 Inserts

11 MAXIMUM APPLICATION RATING
M 80 DC

12 AGENCY APPROVAL [4]
A Without Approval
G UL489 Listed
J UL489A Listed, TUV Certified
T UL489A Listed
7 UL489A Listed, TUV Certified

Notes:
1 Breakers with Terminal Codes 3 & 6 are supplied with bus bars connecting the Line and Load Terminals. For Terminal Code A, Line and Load Terminals must be connected to a copper bus bar having a minimum cross-section of 0.078 square inches. Terminal Code A is not available on the single pole unit.
2 Ratings for 101 to 125 amps are available in 1-pole.
Ratings from 110 to 200 amps are available in 2-pole.
For ratings from 225-300 amps, specify 3-pole.
3 1 pole only available with terminal codes 3 and 6.
4 Agency codes K and 7 are not available with 1 pole.
Agency code J is only available with 1 pole.
Agency code G is only available in 2 and 3 pole.
Circuit P, ratings 101-150 amps (2 pole) and ratings 151-250 amps (3 pole).

C	C	3	–	B	0	–	14	–	450	–	1	2	A	–	K	G
1 Series	2 Actuator	3 Poles		4 Circuit	5 Aux/Alarm Switch		6 Frequency & Delay		7 Current Rating		8 Terminal	9 Actuator Color	10 Mounting/ Barriers		11 Max. App. Rating	12 Agency Approval

1 SERIES
C

2 ACTUATOR [1]

Two Color Visi-Rocker
- **C** Indicate ON, vertical legend
- **D** Indicate ON, horizontal legend
- **F** Indicate OFF, vertical legend
- **G** Indicate OFF, horizontal legend

Single color
- **J** *Vertical legend*
- **K** Horizontal legend

ROCKER STYLE DESCRIPTIONS

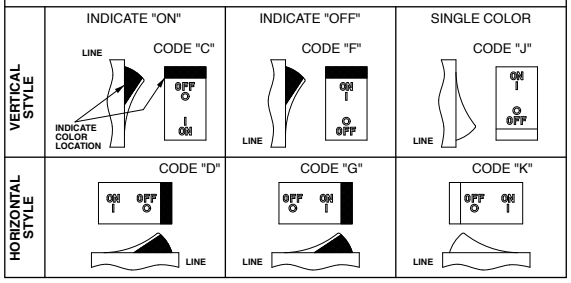

3 POLES [1]
- **1** One
- **2** Two
- **3** Three

4 CIRCUIT
- **B** Series Trip (current)

5 AUXILIARY / ALARM SWITCH [2]
- **0** without Aux Switch
- **2** S.P.D.T., 0.110 Q.C. Term.
- **3** S.P.D.T., 0.139 Solder Lug
- **4** S.P.D.T., 0.110 Q.C. Term. (Gold Contacts)
- **6** S.P.S.T., 0.139 Solder Lug
- **8** S.P.S.T., 0.187 Q.C. Term.
- **9** S.P.D.T., 0.187 Q.C. Term.

6 FREQUENCY & DELAY
- **11** DC Ultra Short
- **12** DC Short
- **14** DC Medium
- **16** DC Long
- **21** 50/60Hz Ultra Short
- **22** 50/60Hz Short
- **24** 50/60Hz Medium
- **26** 50/60Hz Long
- **42** [8] 50/60Hz Short, Hi-Inrush
- **44** [8] 50/60Hz Medium, Hi-Inrush
- **46** [8] 50/60Hz Long, Hi-Inrush
- **52** [8] DC Short, Hi-Inrush
- **54** [8] DC Medium, Hi-Inrush
- **56** DC Long, Hi-Inrush

Notes:
1. Multi-pole breakers have all breakers identical except when specifying Auxiliary switch and/or mixed poles, and have one rocker per breaker.
2. On multi-pole breakers, one auxiliary switch is supplied, mounted in the extreme right pole.
3. Available up to 50 amps maximum.
4. Current ratings 71 - 100 with VDE approvals are available up to two poles maximum.
5. Terminal Code 1 available to 60 amps maximum.
6. Terminal Codes 2, 4, 5 & C available to 50 amps maximum.
7. Terminal Codes 3, 6, 9 & A available to 100 amps maximum.
8. Terminal Codes 9 & C are not VDE approved.
9. Color shown is visi and legend with remainder of rocker black
10. Dual = ON-OFF/I-O legend on actuator.
11. VDE and TUV approval requires Dual (I-O, ON-OFF) markings on rocker.
12. Rockerguard available with all actuator codes.
13. Barriers supplied on multi-pole units only.
14. 2 & 3 pole circuit breakers required for 120/240 AC rating.

7 CURRENT RATING (AMPERES) [4]

CODE	AMPERES						
210	0.100	**295**	0.950	**470**	7.000	**618**	18.000
215	0.150	**410**	1.000	**475**	7.500	**620**	20.000
220	0.200	**512**	1.250	**480**	8.000	**622**	22.000
225	0.250	**415**	1.500	**485**	8.500	**624**	24.000
230	0.300	**517**	1.750	**490**	9.000	**625**	25.000
235	0.350	**420**	2.000	**495**	9.500	**630**	30.000
240	0.400	**522**	2.250	**610**	10.000	**635**	35.000
245	0.450	**425**	2.500	**710**	10.500	**640**	40.000
250	0.500	**527**	2.750	**611**	11.000	**650**	50.000
255	0.550	**430**	3.000	**711**	11.500	**660**	60.000
260	0.600	**435**	3.500	**612**	12.000	**670**	70.000
265	0.650	**440**	4.000	**712**	12.500	**680**	80.000
270	0.700	**445**	4.500	**613**	13.000	**685**	85.000
275	0.750	**450**	5.000	**614**	14.000	**690**	90.000
280	0.800	**455**	5.500	**615**	15.000	**695**	95.000
285	0.850	**460**	6.000	**616**	16.000	**810**	100.00
290	0.900	**465**	6.500	**617**	17.000		

8 TERMINAL
- **1** [5] Stud 10-32
- **2** [6] Screw 10-32 with saddle & washer clamps
- **3** [7] Stud 1/4-20
- **4** [6] Stud M5 x 0.8
- **5** [6] Screw M5 x 0.8 with saddle & washer clamps
- **6** [7] Stud M6
- **9** [7,8] 7/16" Clip Terminal
- **A** [7,8] Plug-In Stud
- **C** [6,8] 5/16" Clip Terminal

9 ACTUATOR COLOR & LEGEND [11]

Actuator or Visi-Color	***Marking:***		***Marking Color:***	
Color:	**ON-OFF**	**Dual** [10]	**Single Color Rocker/Handle**	**Visi-Rocker**
White	**B**	**1**	Black	White
Black	**D**	**2**	White	n/a
Red	**G**	**3**	White	Red
Green	**J**	**4**	White	Green
Blue	**L**	**5**	White	Blue
Yellow	**N**	**6**	Black	Yellow
Gray	**Q**	**7**	Black	Gray
Orange	**S**	**8**	Black	Orange

10 MOUNTING / BARRIERS [12]

		BARRIERS [13]
	Standard Rocker Bezel Threaded Insert, 2 per pole	
A	6-32 X 0.195 inches	yes
C	ISO M3 x 5mm	yes
	Rockerguard Bezel Threaded Insert, 2 per pole	
B	6-32 x 0.195 inches	yes
D	ISO M3 x 5mm	yes

11 MAXIMUM APPLICATION RATING
- **A** 65 DC
- **B** 125 DC
- **C** 120/240 AC [14]
- **D** 240 AC
- **F** 277 AC
- **K** 120 AC
- **M** 80 DC

12 AGENCY APPROVAL
- **A** without approvals
- **F** UL 489 Listed, CSA Certified, & VDE Certified
- **G** UL 489 Listed & CSA Certified
- **J** UL489 Listed, CSA Certified & TUV Certified

C	M	3	–	B	0	–	10	–	450	–	1	0	1	–	C
1 Series	2 Actuator	3 Poles		4 Circuit	5 Aux/Alarm Switch		6 Frequency & Delay		7 Current Rating		8 Terminal	9 Legend Plate	10 Mounting Bezel/Barrier		11 Agency Approval

1 SERIES
C

2 ACTUATOR [1]
M Sealed Toggle, one per pole

3 POLES
1 One **2** Two **3** Three

4 CIRCUIT
A [2] Switch Only (no coil)
B Series Trip (current)
C Series Trip (voltage)
D [3] Shunt Trip (current)
E [3] Shunt Trip (voltage)
F [3] Relay Trip (current)
G [3] Relay Trip (voltage)
H [3,4] Dual Coil with Shunt Trip Voltage Coil
K [3,4] Dual Coil with Relay Trip Voltage Coil

5 AUXILIARY / ALARM SWITCH
0 without Aux Switch
2 S.P.D.T., 0.110 Q.C. Term.
3 S.P.D.T., 0.139 Solder Lug
4 S.P.D.T., 0.110 Q.C. Term. (Gold Contacts)
6 S.P.S.T., 0.139 Solder Lug
8 S.P.S.T., 0.187 Q.C. Term.
9 S.P.D.T., 0.187 Q.C. Term.

6 FREQUENCY & DELAY
03 [2] DC 50/60Hz, Switch Only
10 [6] DC Instantaneous
11 DC Ultra Short
12 DC Short
14 DC Medium
16 DC Long
20 [6] 50/60Hz Instantaneous
21 50/60Hz Ultra Short
22 50/60Hz Short
24 50/60Hz Medium
26 50/60Hz Long
30 DC 50/60Hz Instantaneous
31 DC 50/60Hz Ultra Short
32 DC 50/60Hz Short
34 DC 50/60Hz Medium
36 DC 50/60Hz Long
42 [7] 50/60Hz Short, Hi-Inrush
44 [7] 50/60Hz Medium, Hi-Inrush
46 [7] 50/60Hz Long, Hi-Inrush
52 [7] DC Short, Hi-Inrush
54 [7] DC Medium, Hi-Inrush
56 DC Long, Hi-Inrush

Notes:
1 Actuator Code M: Handle location as viewed from front of breaker:
2 pole - right pole 3 pole - center pole
2 Switch Only circuits, rated up to 50 amps and 3 poles, and only available with VDE. For .02 to 30 amps, select Current Code 630. For 35 - 50 amps, select Current Code 650. For 55-70 amps, select Current Code 670. For 75-100 amps, select Current Code 810.
3 Circuit Codes D,E,F,G,H & K available with Terminal Codes 1,2,4 & 5 only.
4 Consult factory for available Dual Coil options, as special catalog number is required. Dual Coil Voltage Coils with Shunt Trip Construction trip instantaneously on line voltage. Dual Coil Voltage Coils require 30VA minimum power to trip instantaneously and are rated for intermittent duty only.
5 Auxiliary Switch available with Series Trip and Switch Only circuits. On multi-pole breakers, one auxiliary switch is supplied, mounted in the extreme right pole.
6 Voltage coils not rated for continuous duty. Available only with delay codes 10 & 20.
7 Available with Circuit Codes B & D only, and up to 50 amps maximum.
8 Consult factory for current ratings 71-100, in three pole units, available as special catalog number only.
9 Terminal Code 1 available to 60 amps maximum.
10 Terminal Codes 2, 4, 5 and C available to 50 amps maximum.
11 Terminal Codes 3, 6 & 9 available to 100 amps maximum.
12 Terminal Code 7 available to 25 amps maximum.
13 Terminal Code A available to 100 amps maximum.

7 CURRENT RATING (AMPERES) [9]

CODE	AMPERES						
020	0.020	**235**	0.350	**430**	3.000	**614**	14.000
025	0.025	**240**	0.400	**435**	3.500	**615**	15.000
030	0.030	**245**	0.450	**440**	4.000	**616**	16.000
035	0.035	**250**	0.500	**445**	4.500	**617**	17.000
040	0.040	**255**	0.550	**450**	5.000	**618**	18.000
045	0.045	**260**	0.600	**455**	5.500	**620**	20.000
050	0.050	**265**	0.650	**460**	6.000	**622**	22.000
055	0.055	**270**	0.700	**465**	6.500	**624**	24.000
060	0.060	**275**	0.750	**470**	7.000	**625**	25.000
065	0.065	**280**	0.800	**475**	7.500	**630**	30.000
070	0.070	**285**	0.850	**480**	8.000	**635**	35.000
075	0.075	**290**	0.900	**485**	8.500	**640**	40.000
080	0.080	**295**	0.950	**490**	9.000	**650**	50.000
085	0.085	**410**	1.000	**495**	9.500	**660** [9]	60.000
090	0.090	**512**	1.250	**610**	10.000	**670** [9]	70.000
095	0.095	**415**	1.500	**710**	10.500	**680** [9]	80.000
210	0.100	**517**	1.750	**611**	11.000	**685** [9]	85.000
215	0.150	**420**	2.000	**711**	11.500	**690** [9]	90.000
220	0.200	**522**	2.250	**612**	12.000	**695** [9]	95.000
225	0.250	**425**	2.500	**712**	12.500	**810** [9]	100.00
230	0.300	**527**	2.750	**613**	13.000		

OR VOLTAGE COIL (NORMAL RATED VOLTAGE) [7]

CODE	AMPERES						
A06	6 DC	**A32**	32 DC	**J12**	12 AC	**J65**	65 AC
A12	12 DC	**A48**	48 DC	**J18**	18 AC	**K20**	120 AC
A18	18 DC	**A65**	65 DC	**J24**	24 AC	**L40**	240 AC
A24	24 DC	**J06**	6 AC	**J48**	48 AC		

8 TERMINAL
1 [9] Stud 10-32
2 [10] Screw 10-32
3 [11] Stud 1/4-20
4 [10] Stud M5 x 0.8
5 [10] Screw M5 x 0.8
6 [11] Stud M6
7 [12] 0.250 Double Click Connect
9 [11] 7/16" Clip Terminal
A [13] Plug-In Stud
C [10] 5/16" Clip Terminal

9 LEGEND PLATE
0 No Legend

10 MOUNTING / BARRIERS

	MOUNTING STYLE	BARRIERS
1	Standard Hex Nut	no
A	Standard Hex Nut (multi-pole units only)	yes

11 AGENCY APPROVAL
C UL Recognized & CSA Accepted
I UL Recognized & CSA Accepted, UL1500 ignition protection
L UL Recognized & CSA Accepted with listed construction

C	1	2	–	B	0	–	10	–	450	–	1	2	1	–	E
1 Series	2 Actuator	3 Poles		4 Circuit	5 Aux/Alarm Switch		6 Frequency & Delay		7 Current Rating		8 Terminal	9 Actuator Color	10 Mounting/ Barriers		11 Agency Approval

1 SERIES
C

2 ACTUATOR [1]

Two Color Visi-Rocker
- **1** Indicate OFF, vertical legend
- **2** Indicate OFF, horizontal legend

Single color
- **3** Vertical legend
- **4** Horizontal legend

Push-To-Reset, Visi-Rocker
- **5** Indicate OFF, vertical legend
- **6** Indicate OFF, horizontal legend

Push-To-Reset , Single color
- **7** Vertical legend
- **8** Horizontal legend

ROCKER STYLE DESCRIPTIONS

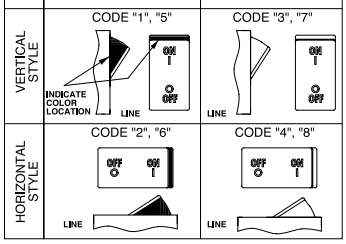

3 POLES [2]
1 One **2** Two **3** Three

4 CIRCUIT
- **A** [3] Switch Only (No Coil)
- **B** Series Trip (Current)
- **C** Series Trip (Voltage)
- **D** [4] Shunt Trip (Current)
- **E** [4] Shunt Trip (Voltage)
- **F** [4] Relay Trip (Current)
- **G** [4] Relay Trip (Voltage)
- **H** [4,5] Dual Coil with Shunt Trip Voltage Coil
- **K** [4,5] Dual Coil with Relay Trip Voltage Coil

5 AUXILIARY / ALARM SWITCH [6]
- **0** without Aux Switch
- **2** S.P.D.T., 0.110 Q.C. Term.
- **3** S.P.D.T., 0.139 Solder Lug
- **4** S.P.D.T., 0.110 Q.C. Term. (Gold Contacts)
- **6** S.P.S.T., 0.139 Solder Lug
- **8** S.P.S.T., 0.187 Q.C. Term.
- **9** S.P.D.T., 0.187 Q.C. Term.

6 FREQUENCY & DELAY
- **03** DC 50/60Hz, Switch Only
- **10** [7] DC Instantaneous
- **11** DC Ultra Short
- **12** DC Short
- **14** DC Medium
- **16** DC Long
- **20** [7] 50/60Hz Instantaneous
- **21** 50/60Hz Ultra Short
- **22** 50/60Hz Short
- **24** 50/60Hz Medium
- **26** 50/60Hz Long
- **30** DC 50/60Hz Instantaneous
- **31** DC 50/60Hz Ultra Short
- **32** DC 50/60Hz Short
- **34** DC 50/60Hz Medium
- **36** DC 50/60Hz Long
- **42** [8] 50/60Hz Short, Hi-Inrush
- **44** [8] 50/60Hz Medium, Hi-Inrush
- **46** [8] 50/60Hz Long, Hi-Inrush
- **52** [8] DC Short, Hi-Inrush
- **54** [8] DC Medium, Hi-Inrush
- **56** [8] DC Long, Hi-Inrush

Notes:
1. Push-to-reset actuators have OFF portion of rocker shrouded.
2. Multi-pole breakers have all poles identical except when specifying Auxiliary switch and/or mixed poles, and have one rocker per breaker. Rocker location as viewed from front panel: 2 pole – left pole; 3 pole – center pole.
3. Switch Only circuits, rated up to 50 amps and 3 poles, and only available with VDE Certification when tied to a protected pole (Circuit Code B, C, D or H.). For .02 to 30 amps, select Current Code 630. For 35 - 50 amps, select Current Code 650. For 55-70 amps, select Current Code 670. For 75-100 amps, select Current Code 810.
4. Circuit Codes D,E,F,G,H & K available with Terminal Codes 1,2,4 & 5 only. Circuit Codes D,F,H & K available up to 50 amps maximum Current Rating.
5. Consult factory for available Dual Coil options, as special catalog number is required. Dual Coil Voltage Coils with Shunt Trip Construction trip instantaneously on line voltage. Dual Coil Voltage Coils require 30VA minimum power to trip instantaneously and are rated for intermittent duty only.
6. Auxiliary Switch available with Series Trip and Switch Only circuits. On multi-pole breakers, one auxiliary switch is supplied, mounted in the extreme right pole. Auxilary switch codes 2, 3 & 4 are VDE approved.
7. Voltage coils not rated for continuous duty. Available only with delay codes 10 and 20.
8. Available with Circuit Codes B & D only, and up to 50 amps maximum.
9. Current ratings 60-70 are available up to four poles maximum. Current ratings 71 - 100 are available up to two poles maximum.
10. Terminal Code 1 available to 60 amps maximum.
11. Terminal Codes 2,4,5 & C available to 50 amps maximum.
12. Terminal Codes 3,6 & 9 available to 100 amps maximum.
13. Terminal Code 7 available to 25 amps maximum.
14. Terminal Code A available to 100 amps maximum.
15. Terminal Codes 7, 9 & C are not VDE approved.
16. Color shown is visi & legend with remainder of rocker black. Dual = ON-OFF/I-O legend.
17. Legend on Push-to-reset bezel/shroud is white with single color actuator codes 7 & 8. Legend on Push-to-reset bezel/shroud matches visi-color of rocker with actuator codes 5 & 6.
18. VDE/TUV approval requires Dual (I-O, ON-OFF) or I-O markings on rocker.
19. VDE/TUV: 30 amps max.; UL/CSA: 50 amps max.; Available in 2 & 3 poles only and limited to AC Delays. "General Purpose amps" not rated for "full load amps" or to be used in applications with a motor.
20. Recessed "OFF SIDE" available with actuator codes 1,2,3&4. Legends on rocker are available in ink stamping only.

7 CURRENT RATING (AMPERES) [9]

CODE	AMPERES	CODE	AMPERES	CODE	AMPERES	CODE	AMPERES
020	0.020	**235**	0.350	**430**	3.000	**614**	14.000
025	0.025	**240**	0.400	**435**	3.500	**615**	15.000
030	0.030	**245**	0.450	**440**	4.000	**616**	16.000
035	0.035	**250**	0.500	**445**	4.500	**617**	17.000
040	0.040	**255**	0.550	**450**	5.000	**618**	18.000
045	0.045	**260**	0.600	**455**	5.500	**620**	20.000
050	0.050	**265**	0.650	**460**	6.000	**622**	22.000
055	0.055	**270**	0.700	**465**	6.500	**624**	24.000
060	0.060	**275**	0.750	**470**	7.000	**625**	25.000
065	0.065	**280**	0.800	**475**	7.500	**630**	30.000
070	0.070	**285**	0.850	**480**	8.000	**635**	35.000
075	0.075	**290**	0.900	**485**	8.500	**640**	40.000
080	0.080	**295**	0.950	**490**	9.000	**650**	50.000
085	0.085	**410**	1.000	**495**	9.500	**660** [9]	60.000
090	0.090	**512**	1.250	**610**	10.000	**670** [9]	70.000
095	0.095	**415**	1.500	**710**	10.500	**680** [9]	80.000
210	0.100	**517**	1.750	**611**	11.000	**685** [9]	85.000
215	0.150	**420**	2.000	**711**	11.500	**690** [9]	90.000
220	0.200	**522**	2.250	**612**	12.000	**695** [9]	95.000
225	0.250	**425**	2.500	**712**	12.500	**810** [9]	100.00
230	0.300	**527**	2.750	**613**	13.000		

OR VOLTAGE COIL (NORMAL RATED VOLTAGE) [7]

CODE	AMPERES	CODE	AMPERES	CODE	AMPERES	CODE	AMPERES
A06	6 DC	**A32**	32 DC	**J12**	12 AC	**J65**	65 AC
A12	12 DC	**A48**	48 DC	**J18**	18 AC	**K20**	120 AC
A18	18 DC	**A65**	65 DC	**J24**	24 AC	**L40**	240 AC
A24	24 DC	**J06**	6 AC	**J48**	48 AC		

8 TERMINAL
- **1** [10] Stud 10-32
- **2** [11] Screw 10-32
- **3** [12] Stud 1/4-20
- **4** [11] Stud M5 x 0.8
- **5** [11] Screw M5 x 0.8
- **6** [12] Stud M6
- **7** [13] 0.250 Double Quick Connect
- **9** [15] 7/16" Clip Terminal
- **A** [14] Plug-In Stud
- **C** [15] 5/16" Clip Terminal

9 ACTUATOR COLOR & LEGEND [16,17,18]

Actuator or Visi-Color	*Marking:*			*Marking Color:*	
Color:	**I-O**	**ON-OFF**	**Dual/None**	**Single Color Rocker/Handle**	**Visi-Rocker**
White	**A**	**B**	**1**	Black	White
Black	**C**	**D**	**2**	White	n/a
Red	**F**	**G**	**3**	White	Red
Green	**H**	**J**	**4**	White	Green
Blue	**K**	**L**	**5**	White	Blue
Yellow	**M**	**N**	**6**	Black	Yellow
Gray	**P**	**Q**	**7**	Black	Gray
Orange	**R**	**S**	**8**	Black	Orange

10 MOUNTING / BARRIERS [1]

	STANDARD ROCKER BEZEL	BARRIERS	VOLTAGE
1	6-32 x 0.195 inches	no	<300
2	6-32 x 0.195 inches	yes	<300
3 [19]	6-32 x 0.195 inches	yes	≥300
4	ISO M3 x 5mm	no	<300
5	ISO M3 x 5mm	yes	<300
6 [19]	ISO M3 x 5mm	yes	≥300
	RECESSED OFF ROCKER		
7	6-32 x 0.195 inches	no	<300
8	6-32 x 0.195 inches	yes	<300
9	6-32 x 0.195 inches	yes	≥300
A	ISO M3 x 5mm	no	<300
C	ISO M3 x 5mm	yes	<300
E	ISO M3 x 5mm	yes	≥300
	PUSH-TO-RESET BEZEL		
B	6-32 x 0.195 inches	no	<300
D	6-32 x 0.195 inches	yes	<300
F [19]	6-32 x 0.195 inches	yes	≥300
H	ISO M3 x 5mm	no	<300
J	ISO M3 x 5mm	yes	<300
M [19]	ISO M3 x 5mm	yes	≥300

11 AGENCY APPROVAL
- **C** UL Recognized & CSA Accepted
- **E** TUV Certified, UL Recognized & CSA Accepted
- **I** UL Recognized STD 1077, UL Recognized 1500 (ignition protected), & CSA Accepted
- **L** UL489 Construction: UL Recognized & CSA Accepted
- **R** UL489 Construction: TUV Certified, UL Recognized & CSA Accepted

C	1	2	–	B	0	–	14	–	450	–	1	2	A	–	K	G
1 Series	2 Actuator	3 Poles		4 Circuit	5 Aux/Alarm Switch		6 Frequency & Delay		7 Current Rating		8 Terminal	9 Actuator Color	10 Mounting/ Barriers		11 Max. App. Rating	12 Agency Approval

1 SERIES
C

2 ACTUATOR [1]

Two Color Visi-Rocker
1 Indicate OFF, vertical legend
2 Indicate OFF, horizontal legend

Single color
3 Vertical legend
4 Horizontal legend

Push-To-Reset, Visi-Rocker
5 Indicate OFF, vertical legend
6 Indicate OFF, horizontal legend

Push-To-Reset , Single color
7 Vertical legend
8 Horizontal legend

ROCKER STYLE DESCRIPTIONS

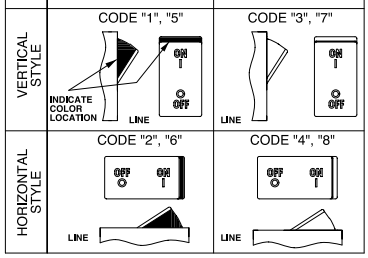

3 POLES [2]
1 One **2** Two **3** Three

4 CIRCUIT
B Series Trip (current)

5 AUXILIARY / ALARM SWITCH [3]
0 without Aux Switch
2 S.P.D.T., 0.110 Q.C. Term.
3 S.P.D.T., 0.139 Solder Lug
4 S.P.D.T., 0.110 Q.C. Term. (Gold Contacts)
6 S.P.S.T., 0.139 Solder Lug
8 S.P.S.T., 0.187 Q.C. Term.
9 S.P.D.T., 0.187 Q.C. Term.

6 FREQUENCY & DELAY
11 DC Ultra Short
12 DC Short
14 DC Medium
16 DC Long
21 50/60Hz Ultra Short
22 50/60Hz Short
24 50/60Hz Medium
26 50/60Hz Long
42 [4] 50/60Hz Short, Hi-Inrush
44 [4] 50/60Hz Medium, Hi-Inrush
46 [4] 50/60Hz Long, Hi-Inrush
52 [4] DC Short, Hi-Inrush
54 [4] DC Medium, Hi-Inrush
56 [4] DC Long, Hi-Inrush

7 CURRENT RATING (AMPERES) [5]

CODE	AMPERES						
210	0.100	**295**	0.950	**470**	7.000	**618**	18.000
215	0.150	**410**	1.000	**475**	7.500	**620**	20.000
220	0.200	**512**	1.250	**480**	8.000	**622**	22.000
225	0.250	**415**	1.500	**485**	8.500	**624**	24.000
230	0.300	**517**	1.750	**490**	9.000	**625**	25.000
235	0.350	**420**	2.000	**495**	9.500	**630**	30.000
240	0.400	**522**	2.250	**610**	10.000	**635**	35.000
245	0.450	**425**	2.500	**710**	10.500	**640**	40.000
250	0.500	**527**	2.750	**611**	11.000	**650**	50.000
255	0.550	**430**	3.000	**711**	11.500	**660**	60.000
260	0.600	**435**	3.500	**612**	12.000	**670**	70.000
265	0.650	**440**	4.000	**712**	12.500	**680**	80.000
270	0.700	**445**	4.500	**613**	13.000	**685**	85.000
275	0.750	**450**	5.000	**614**	14.000	**690**	90.000
280	0.800	**455**	5.500	**615**	15.000	**695**	95.000
285	0.850	**460**	6.000	**616**	16.000	**810**	100.00
290	0.900	**465**	6.500	**617**	17.000		

8 TERMINAL
1 [6] Stud 10-32
2 [7] Screw 10-32
3 [8] Stud 1/4-20
4 [7] Stud M5 x 0.8
5 [7] Screw M5 x 0.8
6 [8] Stud M6
9 [8,9] 7/16" Clip Terminal
A [8] Plug-In Stud
C [7,9] 5/16" Clip Terminal

9 ACTUATOR COLOR & LEGEND [10]

Actuator or Visi-Color	***Marking:***		***Marking Color:***	
Color:	**ON-OFF**	**Dual** [11,12]	**Single Color Rocker/Handle**	**Visi-Rocker**
White	**B**	**1**	Black	White
Black	**D**	**2**	White	n/a
Red	**G**	**3**	White	Red
Green	**J**	**4**	White	Green
Blue	**L**	**5**	White	Blue
Yellow	**N**	**6**	Black	Yellow
Gray	**Q**	**7**	Black	Gray
Orange	**S**	**8**	Black	Orange

10 MOUNTING / BARRIERS

		BARRIERS [15]
	STANDARD ROCKER BEZEL	
	Threaded Insert, 2 per pole	
A	6-32 X 0.195 inches	yes
C	ISO M3 x 5mm	yes
	RECESSED OFF ROCKER [14]	
	Threaded Insert, 2 per pole	
E	6-32 x 0.195 inches	yes
F	ISO M3 x 5mm	yes
	PUSH-TO-RESET BEZEL [13]	
	Threaded Insert, 2 per pole	
B	6-32 x 0.195 inches	yes
D	ISO M3 x 5mm	yes

11 MAXIMUM APPLICATION RATING
A 65 DC
B 125 DC
C 120/240 AC [16]
D 240 AC
F 277 AC
K 120 AC
M 80 DC

12 AGENCY APPROVAL [12]
A without approvals
G UL 489 Listed & CSA Certified
J UL489 Listed, CSA Certified & TUV Certified

Notes:
1 Push-to-reset actuators have OFF portion of rocker shrouded.
2 Multi-pole breakers have all breakers identical except when specifying Auxiliary switch and/or mixed poles, and have one rocker per breaker.
3 On multi-pole breakers, one auxiliary switch is supplied, mounted in the extreme right pole.
4 Available up to 50 amps maximum.
5 Current ratings 71 - 100 with VDE approvals are available up to two poles maximum.
6 Terminal Code 1 available to 60 amps maximum.
7 Terminal Codes 2, 4, 5 & C available to 50 amps maximum.
8 Terminal Codes 3, 6, 9 & A available to 100 amps maximum.
9 Terminal Codes 9 & C are not VDE approved.
10 Color shown is visi and legend with remainder of rocker black
11 Dual = ON-OFF/I-O legend on actuator.
12 TUV approval requires Dual (I-O, ON-OFF) markings on rocker.
13 Legend on push-to-reset bezel/shroud is white when single color rocker is ordered. Legend on push-to-reset bezel/shroud matches visi-color of rocker with actuator codes 5 & 6.
14 Recessed "OFF-SIDE" available with actuator codes 1, 2, 3, & 4. Legends on rocker are available in ink stamping only.
15 Barriers supplied on multi-pole units only.
16 2 & 3 pole circuit breakers required for 120/240 AC rating.

Circuit & Terminal Diagrams: in. [mm]

DESCRIPTION	CODE	TERMINAL DIMENSIONAL DETAIL	RATING (AMPS) 25	50	100	80
#10-32 STUD	1	.723[18.36] / .150 [3.81]	■	■		
M5 STUD	4	.688[17.48] / .150 [3.81]	■	■		
#1/4-20 STUD	3	.723[18.36] / .150 [3.81]	■	■	■	
M6 STUD	6					
#1/4-20 STUD	3	.675 [17.15] / .235 [5.97]				■
M6 STUD	6	.669 [16.99] / .264 [6.71]				■
#10-32 SCREW	2	±.015 ±.38 / .150 [3.81]	■	■		
M-5 SCREW	5					

DESCRIPTION	CODE	TERMINAL DIMENSIONAL DETAIL	RATING (AMPS) 25	50	100	80
.250 DOUBLE Q.C.	7	.400 [10.16] / .820 [20.83] / .173 [4.39] / .320 [8.13] / .250 [6.35]	■			
7/16" CLIP TERMINALS	9	.437 DIA [Ø11.10] COMPONENT DIA / .644[16.36] / .901[22.89]	■	■		
PUSH-IN STUD	A	.960 [24.38] / +.002 -.000 +.05 -.00 .311 DIA [Ø7.90] / .558 [14.17] CENTERLINE OF PUSH-IN STUD CONTACT AREA / PUSH-IN STUD MATING HOLE	■	■	■	■

NOTES: TOLERANCE ON STUD LENGTHS IS ±.031 [±.79] UNLESS OTHERWISE SPECIFIED.

AUXILIARY / ALARM SWITCH TERMINAL DETAIL[3]

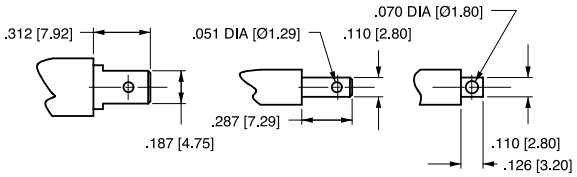

TAB (Q.C.) .187 | TAB (Q.C.) .110 | SOLDER TYPE

TIGHTENING TORQUE SPECIFICATIONS	
THREAD SIZE	TORQUE
#6-32 [M3] MOUNTING INSERTS	7-9 IN-LBS [0.8-1.0 NM]
#10-32 & M5 THD STUDS	15-20 IN-LBS [1.7-2.3 NM]
#10-32 THD SCREW	15-20 IN-LBS [1.7-2.3 NM]
#1/4-20 & M6 THD STUDS	30-35 IN-LBS [3.4-4.0 NM]

TERMINAL HARDWARE				
TERMINAL DESCRIPTION	CODE	AGENCY APPROVAL	AMPERE RATING	HARDWARE SUPPLIED
#10-32 STUD	1	ALL	.02 - 50	LOCK WASHER - FLAT WASHER - NUT
M5 STUD	4	ALL	.02 - 50	LOCK WASHER - FLAT WASHER - NUT
#1/4-20 STUD	3	ALL	.02 - 80	LOCK WASHER - FLAT WASHER - NUT
			81 - 100	LOCK WASHER - NUT - (2)FLAT WASHER - NUT
M6 STUD	6	ALL	.02 - 80	LOCK WASHER - FLAT WASHER - NUT
			81 - 100	LOCK WASHER - NUT - (2)FLAT WASHER - NUT
#10-32 SCREW	2 & 5	UL RECOGNIZED	.02 - 50	* SADDLE CLAMP - FLAT WASHER - SCREW
		UL-489 LISTED	.02 - 50	LOCK WASHER - FLAT WASHER - SCREW
		TUV & VDE CERTIFIED	.02 - 16	* SADDLE CLAMP - FLAT WASHER - SCREW
		TUV & VDE CERTIFIED	16.1 - 50	LOCK WASHER - FLAT WASHER - SCREW

* THE SADDLE CLAMP IS FOR DIRECT WIRE CONNECTION USE. DISCARD SADDLE CLAMP IF WIRE TERMINAL LUG IS USED

Notes:
1 All dimensions are in inches [millimeters].
2 Tolerance ±.020 [.51] unless otherwise specified.
3 Available on Series Trip and Switch Only Circuits when called for on multi-pole units.
Only one auxiliary switch is normally supplied, as viewed in mulit-pole identification scheme.

Circuit & Terminal Diagrams: in. [mm]

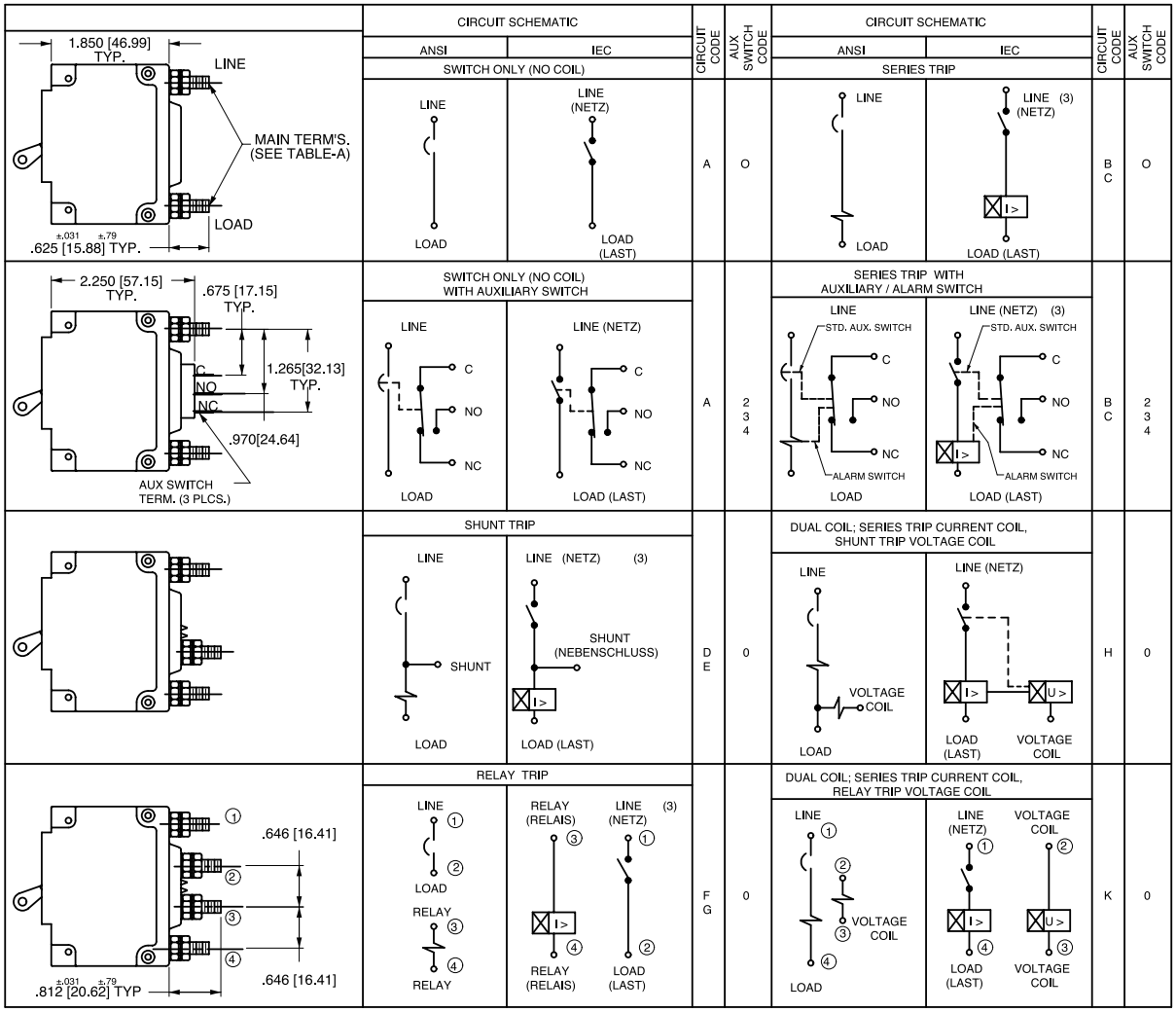

HANDLE POSITION VS. AUX/ALARM SWITCH MODE					
	STANDARD C/B		MID TRIP C/B		
CIRCUIT BREAKER MODE	HANDLE POSITION	AUX. SWITCH MODE	HANDLE POSITION	STANDARD ALARM SWITCH MODE	REVERSE ALARM SWITCH MODE[4]
OFF	30° OFF O	NC NO C	30° OFF O	NC NO C	NC NO C
ON	ON 30°	NC NO C	ON 30°	NC NO C	NC NO C
ELECTRICAL TRIP	30° OFF O	NC NO C	90°	NC NO C	NC NO C

Notes:
1 All dimensions are in inches [millimeters].
2 Tolerance ±.020 [.51] unless otherwise specified.
3 Schematic shown represents current trip circuits.
4 Available only as special catalog number.

Dimensional Specifications: in. [mm]

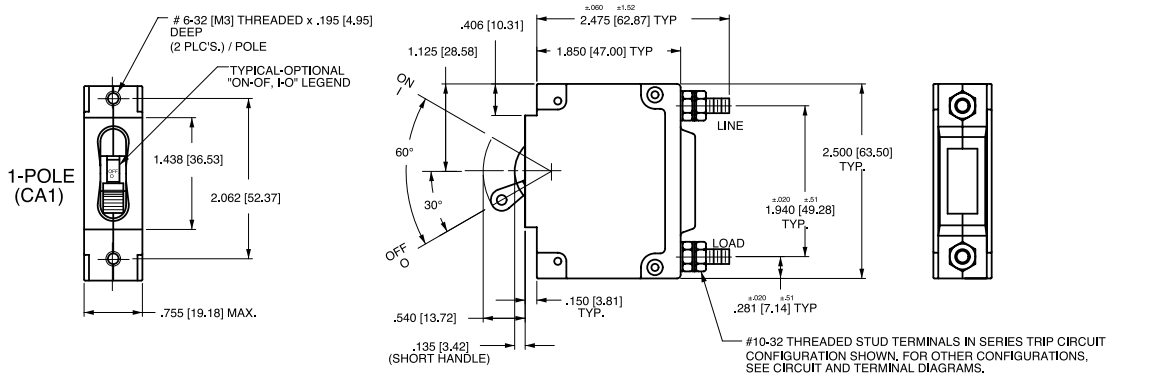

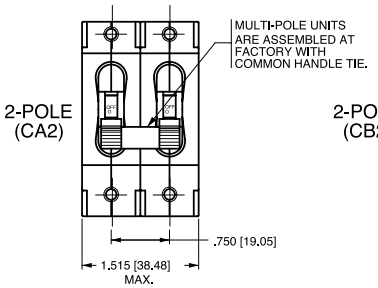

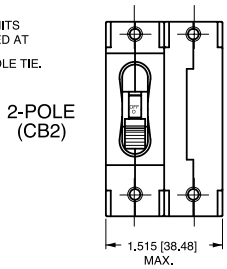

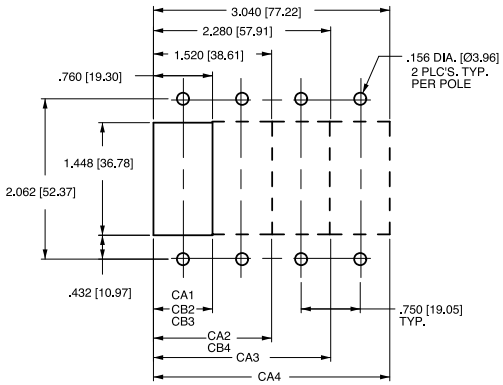

PANEL CUTOUT DETAIL

TOLERANCES ±.005 [.12]

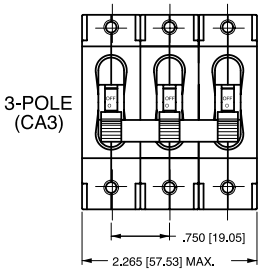

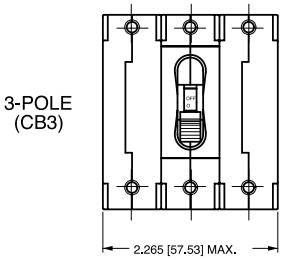

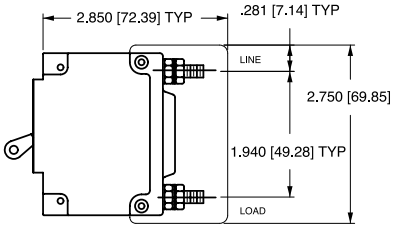

BARRIER FOR UL-RECOGNIZED MULTI-POLE BREAKERS

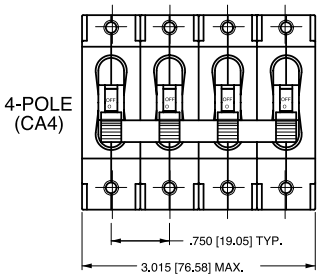

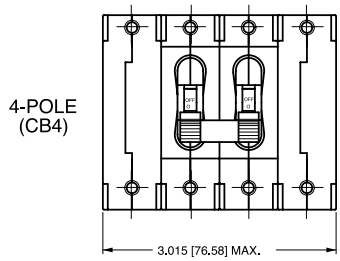

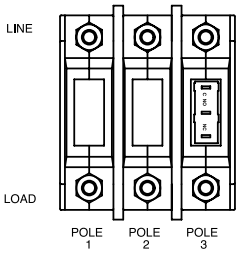

MULTI-POLE IDENTFICATION SCHEME AS VIEWED FROM TERMINAL END OF BREAKER.

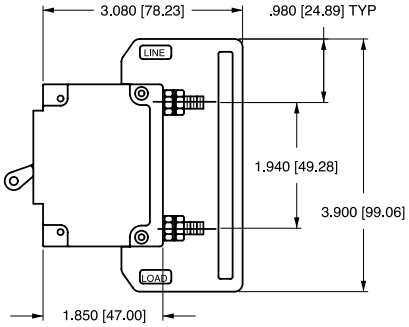

BARRIER FOR UL-489 LISTED MULTI-POLE BREAKERS

Notes:
1 All dimensions are in inches [millimeters].
2 Tolerance ±.020 [.51] unless otherwise specified.

Dimensional Specifications: in. [mm]

1-POLE (CA1)

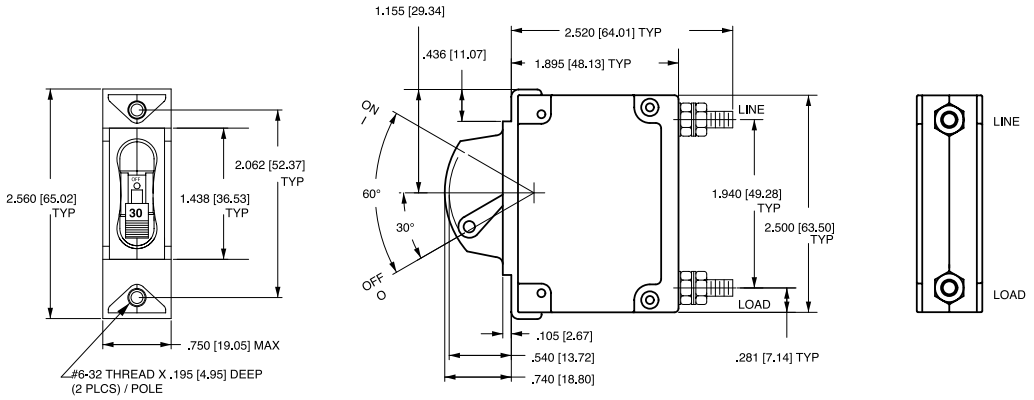

2-POLE (CA2)

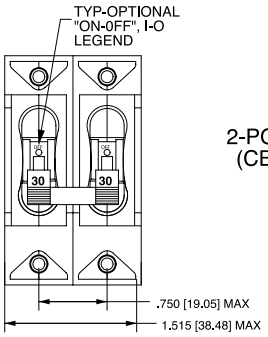

2-POLE (CB2)

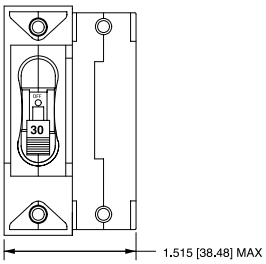

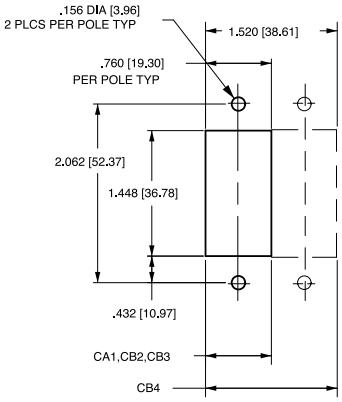

PANEL CUTOUT DETAIL

3-POLE (CB3)

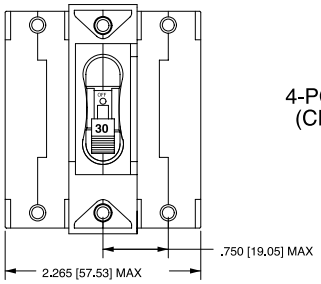

4-POLE (CB4)

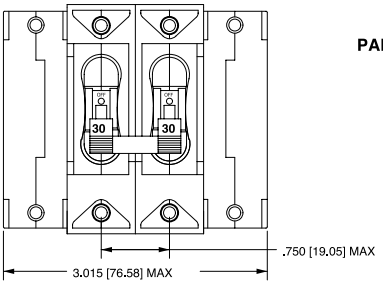

*Handleguard available as special catalog number only

SNAP-IN

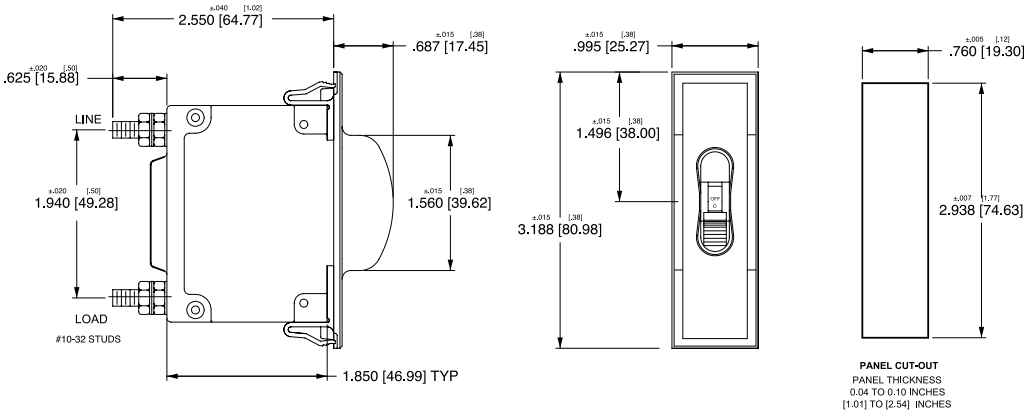

Notes:
1 All dimensions are in inches [millimeters].
2 Tolerance ±.020 [.51] unless otherwise specified.

Dimensional Specifications: in. [mm]

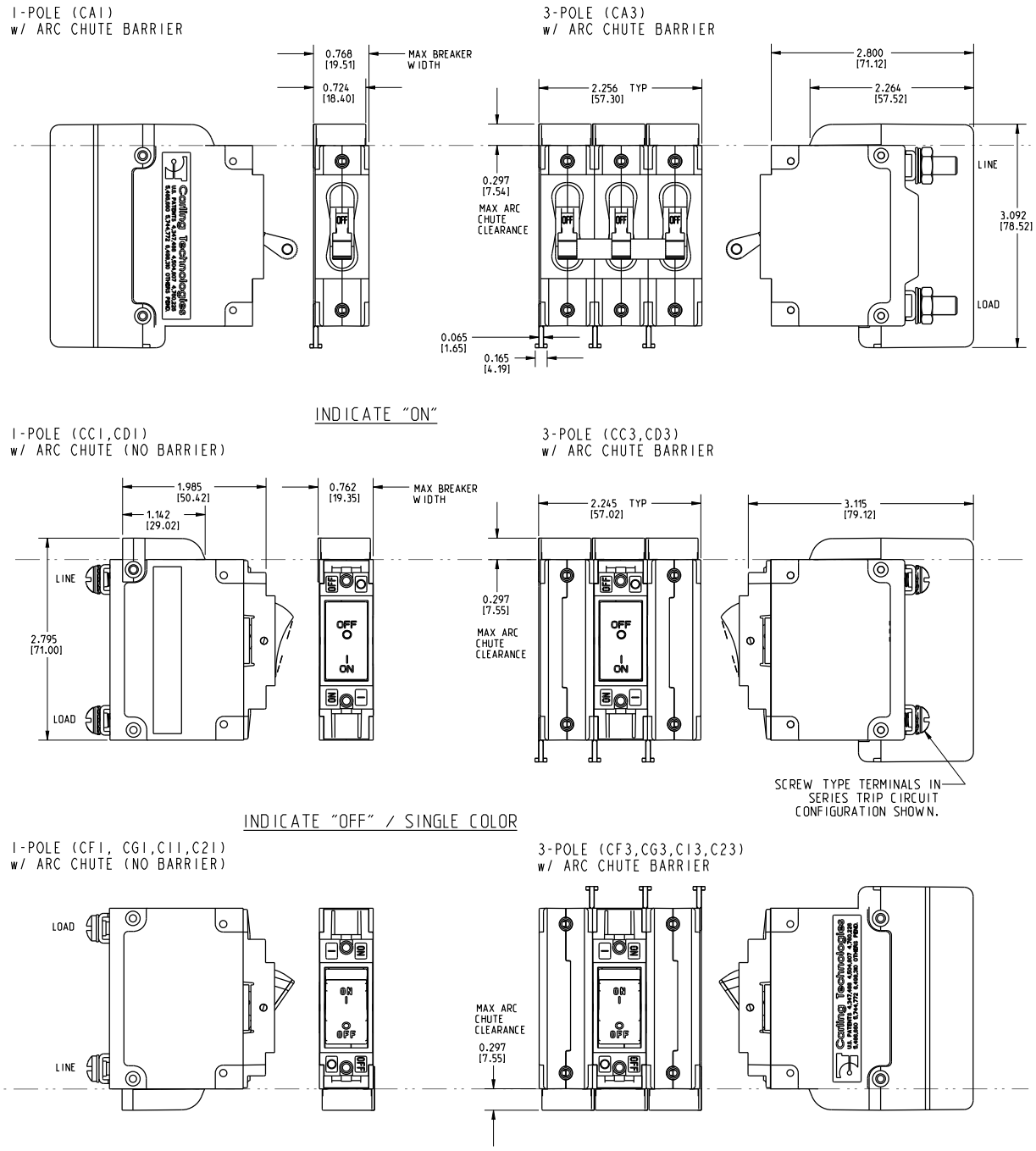

Notes:
1 Only 1-pole and 3-pole configurations shown. Arc chute (without barrier) and arc chute barrier also available for 2-pole construction.
2 Dimensions apply to all variations shown.
3 Notice that line and load terminal orientation for indicate on and indicate off rocker circuit breakers are opposite.
4 Screw type terminals shown for Rocker style (CF1, C11, etc) circuit breakers. For other terminal configurations see circuit and terminal diagrams.
5 All dimensions are in inches [millimeters].
6 Tolerance ± .020 unless otherwise specified.
7 Must be ordered under a special catalog number.

Dimensional Specifications: in. [mm]

PARALLEL POLE
(CA2-P)

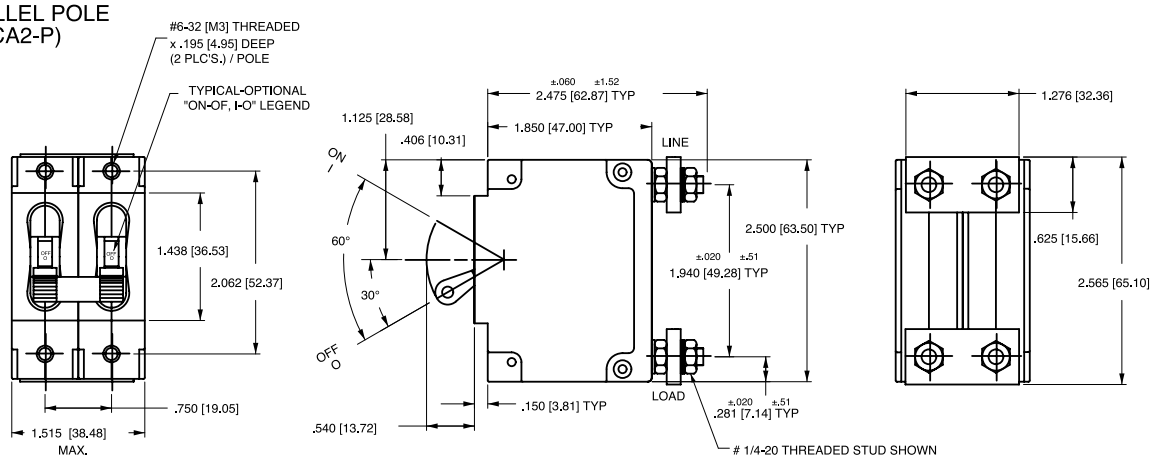

PARALLEL POLE
(CA3-P)

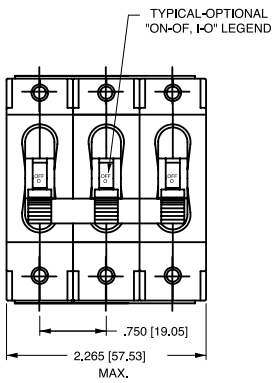

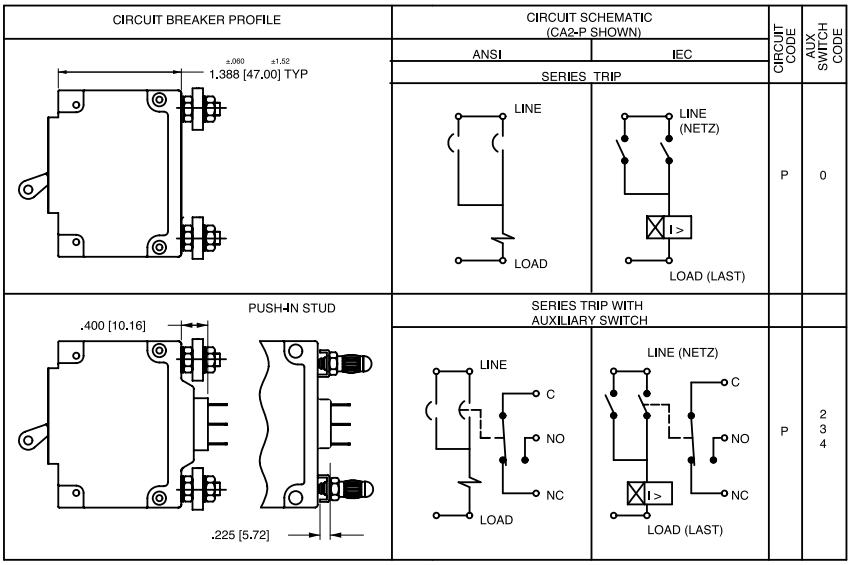

TERMINAL DETAILS

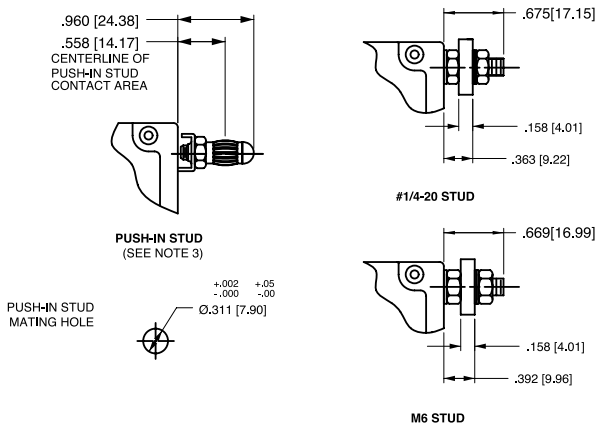

PANEL CUTOUT DETAIL

TOLERANCES ±.005 [.12]

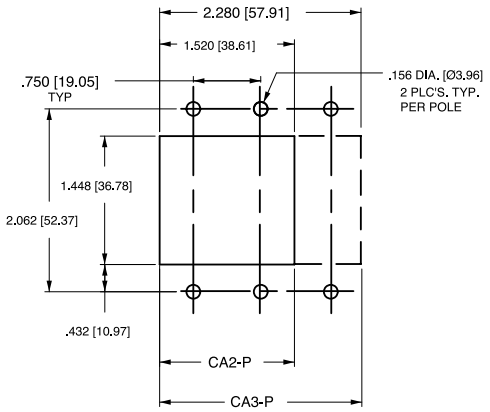

Notes:
1 All dimensions are in inches [millimeters].
2 Tolerance ±.020 [.51] unless otherwise specified.

Dimensional Specifications: in. [mm]

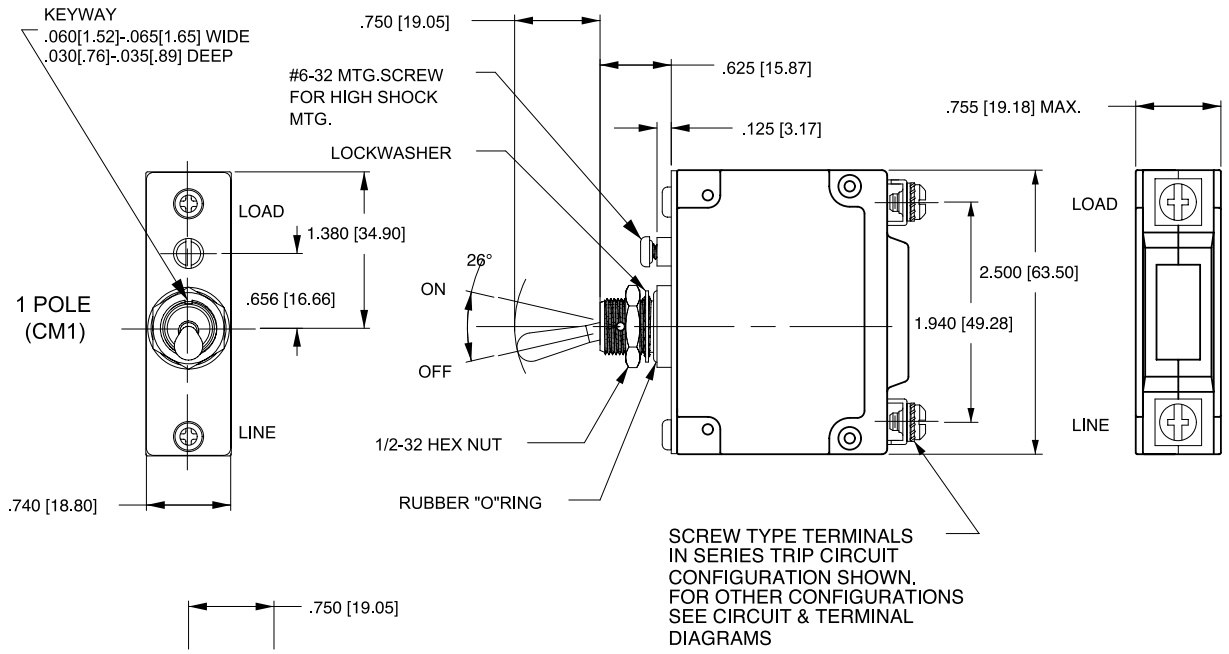

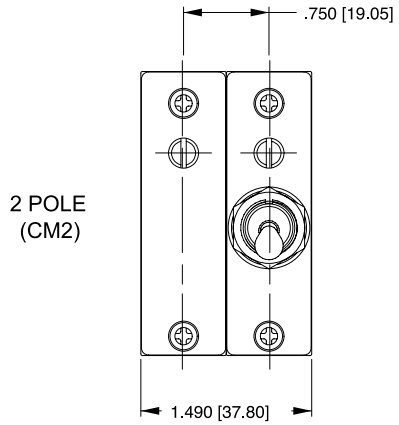

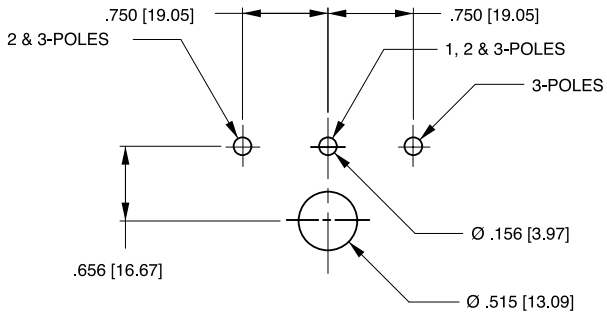

PANEL CUTOUT DETAIL
TOLERANCES ±.005[.13]

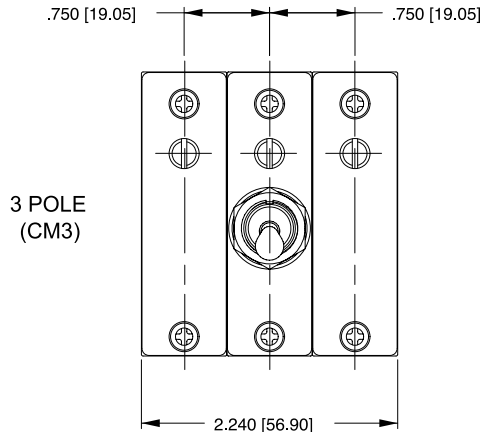

Notes:
1 All dimensions are in inches [millimeters].
2 Tolerance ±.020 [.51] unless otherwise specified.

Circuit & Terminal Diagrams: in. [mm]

CIRCUIT BREAKER PROFILE	CIRCUIT SCHEMATIC ANSI	CIRCUIT SCHEMATIC IEC	CIRCUIT CODE	AUX SWITCH CODE	CIRCUIT SCHEMATIC ANSI	CIRCUIT SCHEMATIC IEC	CIRCUIT CODE	AUX SWITCH CODE
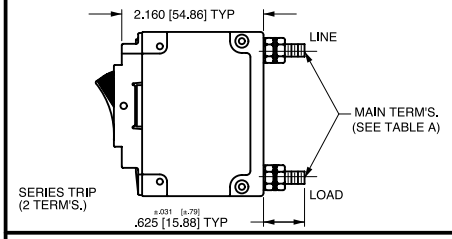	SWITCH ONLY (NO COIL)				SWITCH TRIP			
	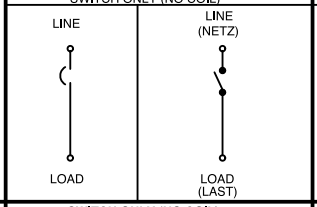		A	0	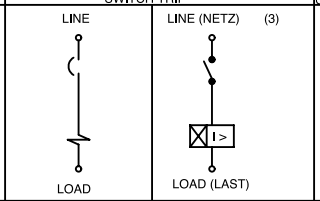		BC	0
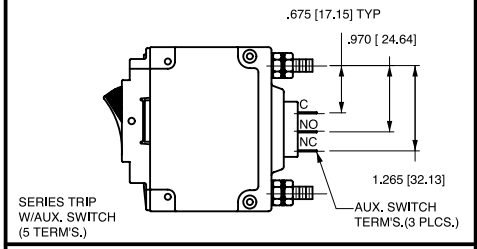	SWITCH ONLY (NO COIL) WITH AUXILIARY SWITCH				SERIES TRIP WITH AUXILIARY SWITCH			
	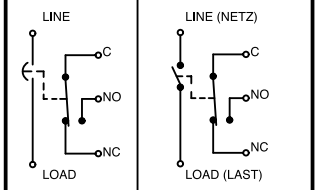		A	2 3 4	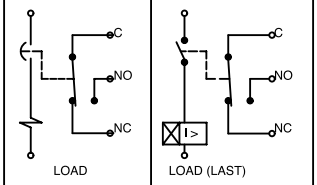		BC	2 3 4
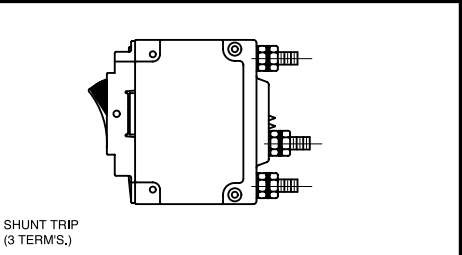	SHUNT TRIP				DUAL COIL; SERIES TRIP CURRENT COIL, SHUNT TRIP VOLTAGE COIL			
	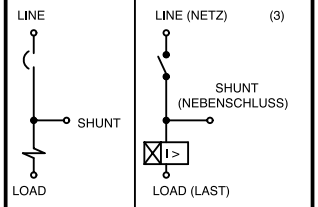		DE	0	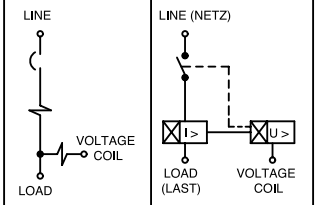		H	0
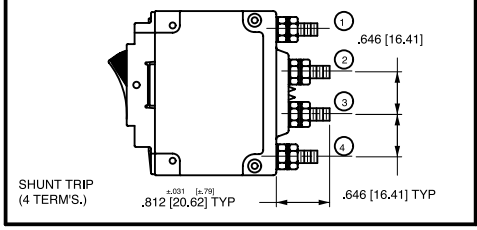	RELAY TRIP				DUAL COIL; SERIES TRIP CURRENT COIL, RELAY TRIP VOLTAGE COIL			
	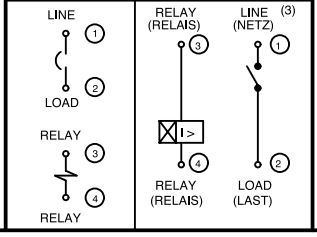		FG	0	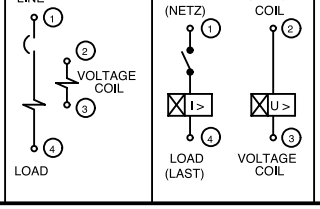		K	0

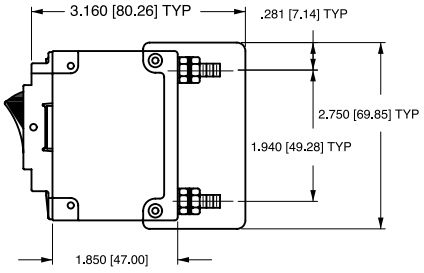

BARRIER FOR UL-RECOGNIZED MULTI-POLE BREAKERS

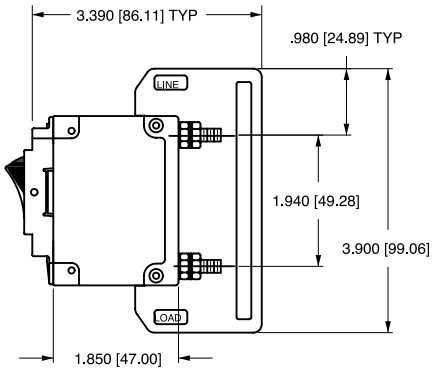

BARRIER FOR UL-489 LISTED MULTI-POLE BREAKERS

Notes:
1 All dimensions are in inches [millimeters].
2 Tolerance ±.020 [.51] unless otherwise specified.
3 Schematic shown represents current trip circuit.

Dimensional Specifications: in. [mm]

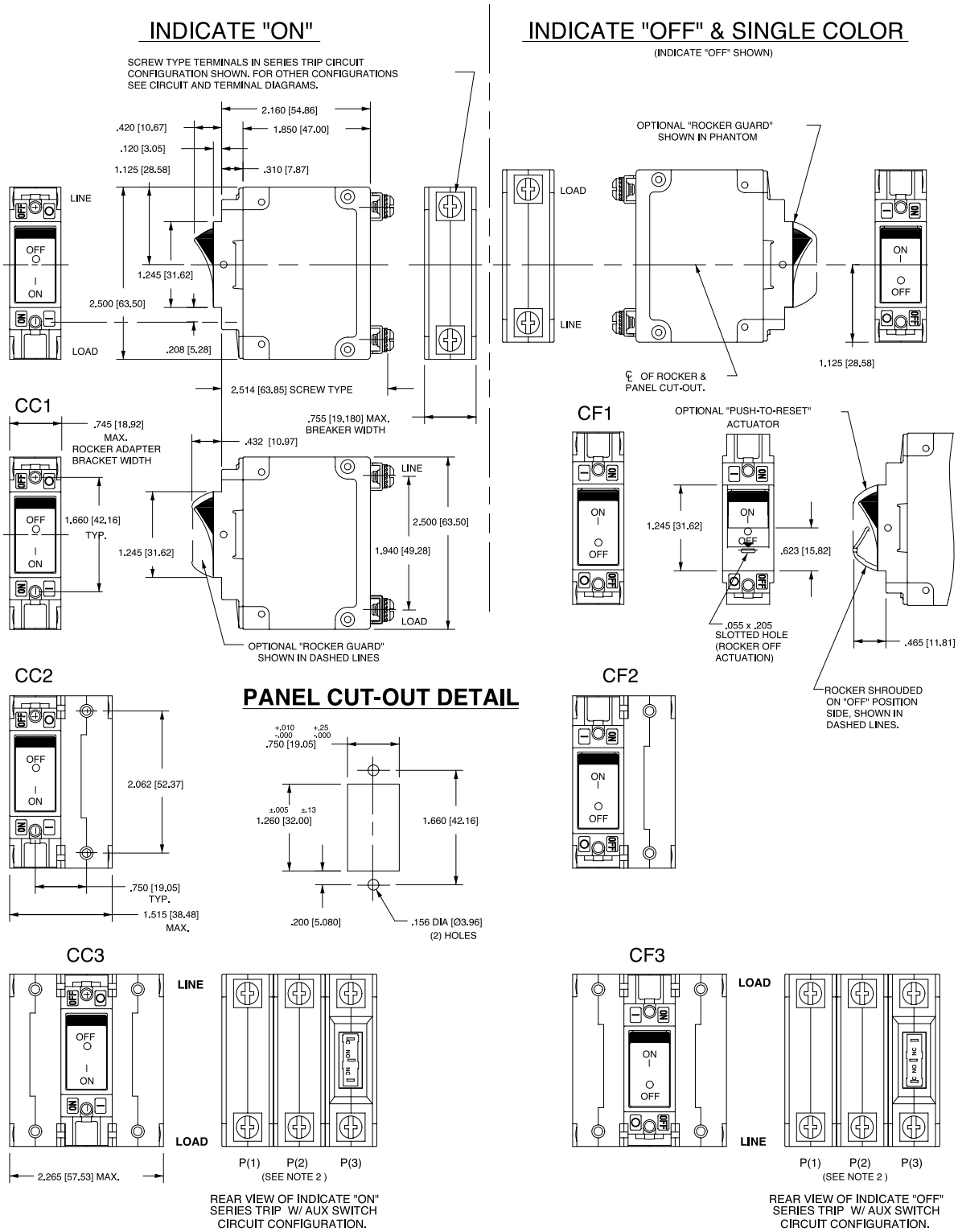

Notes:
1 Dimensions apply to all variations shown. Notice that circuit breaker line and load terminal orientation on indicate OFF is opposite of indicate ON.
2 For pole orientation with horizontal legend, rotate front view clockwise 90°.
3 All dimensions are in inches [millimeters].
4 Tolerance ±.020 [.51] unless otherwise specified.

Dimensional Specifications: in. [mm]

INDICATE "OFF" & SINGLE COLOR

C11

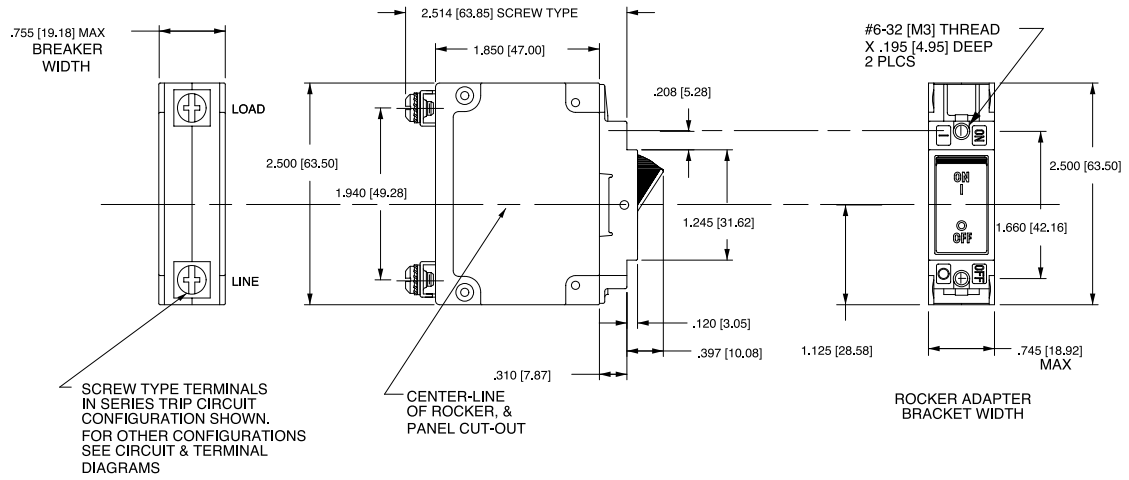

C12

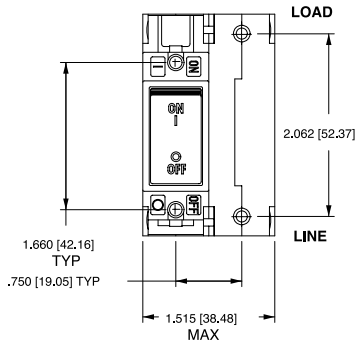

PANEL CUT-OUT DETAIL

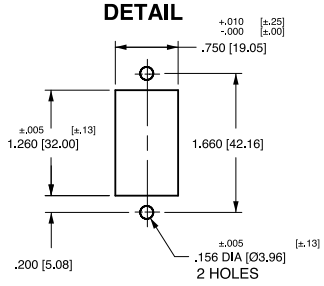

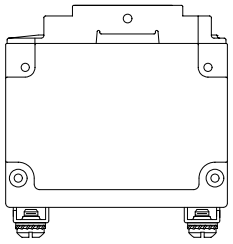

SIDE VIEW OF BREAKER IN THE "ON" POSITION

C13

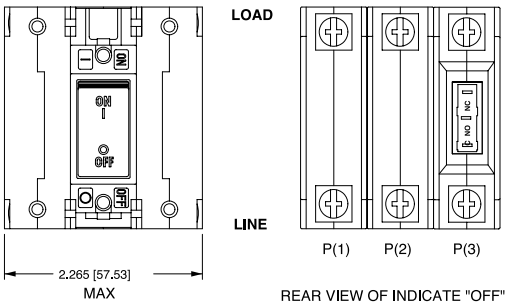

REAR VIEW OF INDICATE "OFF" SERIES TRIP W/ AUX SWITCH CIRCUIT CONFIGURATION.

PUSH-TO-RESET ACTUATOR

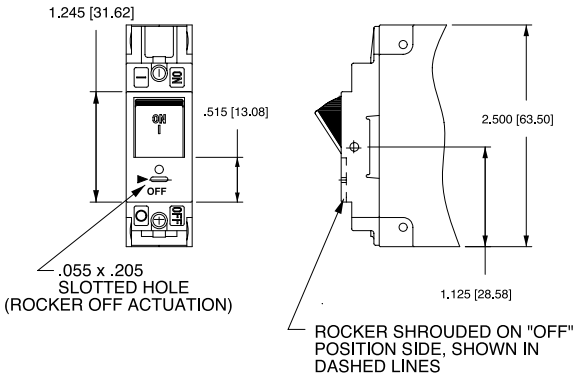

ACTUATOR SIDE VIEW
(SURFACE CONTOURS)

FLAT ROCKER

RECESSED OFF SIDE ROCKER

Notes:
1 For pole orientation with horizontal legend, rotate front view clockwise 90°.
2 All dimensions are in inches [millimeters].
3 Tolerance ±.020 [.51] unless otherwise specified.

Authorized Sales Representatives and Distributors

Click on a region of the map below to find your local representatives and distributors or visit ***www.carlingtech.com/findarep***.

About Carling

Founded in 1920, Carling Technologies is a leading manufacturer of electrical and electronic switches and assemblies, circuit breakers, electronic controls, power distribution units, and multiplexed power distribution systems. With four ISO registered manufacturing facilities and technical sales offices worldwide, Carling Technologies Sales, Service and Engineering teams do much more than manufacture electrical components, they engineer powerful solutions! To learn more about Carling please visit **www.carlingtech.com/company-profile.**

To view all of Carling's environmental, quality, health & safety certifications please visit **www.carlingtech.com/environmental-certifications**

Worldwide Headquarters
Carling Technologies, Inc.
60 Johnson Avenue, Plainville, CT 06062
Phone: 860.793.9281 **Fax:** 860.793.9231
Email: sales@carlingtech.com

Northern Region Sales Office: nrsm@carlingtech.com
Southeast Region Sales Office: sersm@carlingtech.com
Midwest Region Sales Office: mrsm@carlingtech.com
West Region Sales Office: wrsm@carlingtech.com
Latin America Sales Office: larsm@carlingtech.com

Asia-Pacific Headquarters
Carling Technologies, Asia-Pacific Ltd.,
Suite 1607, 16/F Tower 2, The Gateway,
Harbour City, 25 Canton Road,
Tsimshatsui, Kowloon, Hong Kong
Phone: Int + 852-2737-2277 **Fax:** Int + 852-2736-9332
Email: sales@carlingtech.com.hk

Shenzhen, China: shenzhen@carlingtech.com
Shanghai, China: shanghai@carlingtech.com
Pune, India: india@carlingtech.com
Kaohsiung, Taiwan: taiwan@carlingtech.com
Yokohama, Japan: japan@carlingtech.com

Europe | Middle East | Africa Headquarters
Carling Technologies LTD
4 Airport Business Park, Exeter Airport,
Clyst Honiton, Exeter, Devon, EX5 2UL, UK
Phone: Int + 44 1392.364422 **Fax:** Int + 44 1392.364477
Email: ltd.sales@carlingtech.com

Germany: gmbh@carlingtech.com
France: sas@carlingtech.com

Carling Technologies®
Innovative Designs. Powerful Solutions.